manhattan-c007-fb

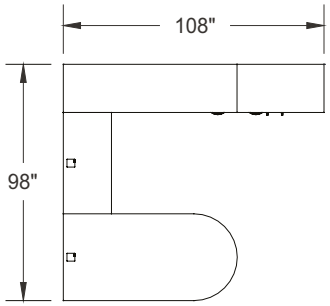

Laminate: Driftwood
Metal: Satin Nickel
Handles: HJA

ITEM	QTY	CODE	DESCRIPTION	LIST PRICE $	TOTAL $
	1	MA 3672 TDG	D table 36" x 72" x 29"H with end gable	1 225	1 225
A	1	[MAGSN]	Magog base 18" diametre	292	292
	1	[CAPF]	Option - CAPF grommet	26	26
B	1	MA 2042 BR FM GRC	Bridge 20" x 42" x 29"H - Full modesty	559	559
	1	[CAPF]	Option - CAPF grommet	26	26
C	1	MA 2072 E FM	Credenza 20" x 72" x 29"H with E pedestal on right - Full modesty	1 518	1 518
D	1	MA 203672 AREV	Wardrobe 20" x 36" x 72"H with pedestal on left and wardrobe on right	2 566	2 566
				Total:	6 212
				Total without options:	5 868