LEVEL

Price List
USA 2025

logiflex

Table of Contents

Introduction 3

Update Summary 4
Product Map 5
Our social responsability 9
Conditions of Sale 9
Manufacturing Standards 10
How to Use the Price List 11
How to Order Double and Triple Desks 12
Appendix A: Colors and Finishes 13
Appendix B: Grommet and Communication Box 14
Appendix C: Pedestal Cushion 15
Appendix D: Modesty Panel 17
Appendix E: Wood Grain 17
Appendix F: Utility and File Drawers 17
Appendix G: Layering Desk Supports 18
Appendix H: Hutch Applications 19
Appendix I: Divider Screens 20
Appendix J: Calculation/Use of Electrical Components 21
Appendix K: Electrical Wire Management Solutions 24

Desks / Individual 29

Rectangular Desks 30
Layering Desks 31
Installed Desks 35
Layering Installed Desks 36

Desks / Double and benching 37

Double Rectangular Desks 38
Double Layering Desks 39
Double Installed Desks 43
Shared Benching Workstation - 1-sided 45
Shared Benching Workstation - 2-sided 49

Secondary Desks 53

Returns 54
Double Returns 56
Bridges 58

Floor Storage 59

Low Pedestals 60
Mobile Pedestals 64
High Pedestals 67
Shared High Pedestals 77
Credenzas 80

Storage Units 85

Leg Base Storage 86
Sliding Wardrobe Towers 88
Wardrobe Towers 91
Storage Towers 97
Bookcases 103

Collaborative Furniture 108

Surface Units 109
Shelf for Shared Desks 110
Wall Hutches 113
Desk Hutches 119
Storage Hutches 122
Shared Desk Hutches 125
Shared Storage Hutches 128

Collaborative Furniture 131

Collaborative and Multimedia Tables 132

Divider Screens 136

Acrylic 137
Laminate 141
Tackboards 144

Accessories 148

Handles 149
Keyboard Trays 150
CPU Holders 151
Computer Monitor Brackets 152
Miscellaneous Accessories 154
Electrical Accessories 156

Introduction

Beautiful finish. Bold, sleek design.
100% North American-built furniture made with
quality materials and environmentally conscious practices.
With its delicate lines, the new Level furniture series
sets a new standard in contemporary office furnishing.

Derived from a union between furniture designers
and an upscale Quebec manufacturer,
the Level series is a fresh look at commercial furnishings:
contemporary, sustainable, innovative and extraordinary.

Update Summary

The Level price list presents these principal modifications:

DATE	SECTION	MODIFICATIONS
March 3, 2025	All the Price List	• All prices have been increased by approximately 3%.

Previous updates:

DATE	SECTION	MODIFICATIONS
December 10, 2024	Accessories	• Addition of the Shift double monitor arm with docking: SHIFT-2A.
March 1, 2024	All the Price List	• All prices have been increased by approximately 5%.
November 22, 2023	All the Price List	• Removal of high gloss. • Adjustment prices of furniture with glass doors.
	Electrical accessories	• Addition of the supports BE-WMS-32 and BE-WMD-32. • Addition of items for 15a electric circuit: BE1-DMB, BE1-DC, BE1-PI, BE1-J & BE1-HC. • Removal of QIRE, OAS, INT, COV1, F-714 & TEL. • Replacement of QIBL by CQIBL & CQIWH.
July 4, 2023	Electrical accessories	• Chicago Code : Certain electrical components are now marked prohibited or restricted for orders in chicago. (USA pricelist only).
May 22, 2023	Mobile Pedestals	• Addition of lock option for MOBC and MOBD.

Product Map

Desks / Individuals

Rectangular Desks p. 30
YY YM WW WM MM

Layering Desks p. 31
YF WF MF

Installed Desks p. 35
YI WI MI

Layering Installed p. 36
FI

Desks / Doubles & benching

Double Rectangular Desks p. 38
YSYS-YSYS YSMS-MSYS MSMS-MSMS

Double Layering Desks p. 38
YSF-FYS MSF-FMS

Double Installed Desks p. 43
YSI-IYS MSI-IMS

Triple 120 Degree Desks p. 44
YS-YS-YS MS-MS-MS

Shared Benching Workstation - 1-sided p. 45
SB1Y SB2Y SB3Y SB4Y

Shared Benching Workstation - 2-sided p. 49
DB2Y DB4Y DB6Y DB8Y

Secondary Desks

Returns p. 54
YR RY MR RM

Double Returns p. 56
YSR-RYS RYS-YSR MSR-RMS RMS-MSR

Bridges p. 58
BR

Product Map

Floor Storage

Low Pedestals p. 60

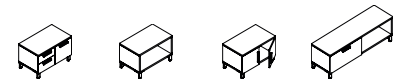

BC19 | BBL19 | AR19 | CLO19

Mobile Pedestals p. 64

MOBC | MOBD

Sliding-Surface Pedestals p. 67

UN04

High Pedestals p. 67

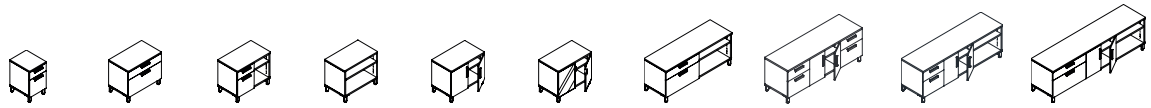

D25 | K25 | DO25 | BBL25 | AR25 | AR25VS | KO25 | DARD | UN02S | UN02

Shared High Pedestals p. 77

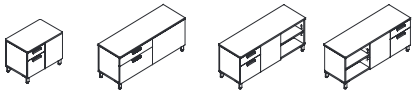

DD25L | KD25L | KOD25 | OKD25

Credenzas p. 80

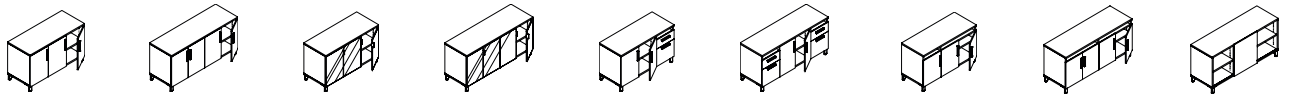

AR3 | ARAR | AR3VS | ARARVS | ARJ | JARJ | PGAR3 | PGARAR | SF

Storage towers and bookcases

Leg Base Storage p. 86

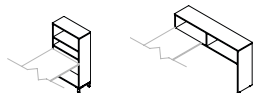

UN22 | UN23

Sliding-Wardrobe Towers p. 88

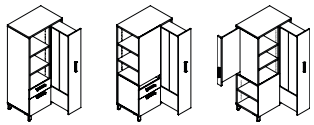

UN09 | UN10 | UN11

Wardrobe Towers p. 91

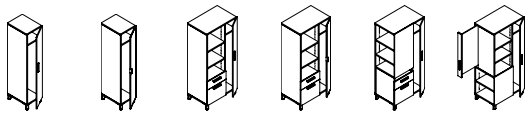

V | VVS | UN05 | UN05VS | UN06 | UN07

Shared Storage Towers / Bookcases p. 97

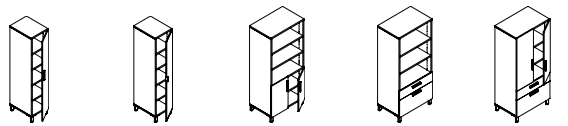

AR | ARVS | UN13 | UN14 | UN16

Storage Towers p. 100

UND03L

Bookcases p. 103

BBL 29 | BBL 36 | BBL 42 | BBL 48 | BBL 51 | BBL 54 | BBL 60 | BBL 64 | BBL 66

Product Map

Wall & Surface Storage

Surface Units p. 109

HBBL

Shelf for Shared Desks p. 110

SD SH

Wall Units p. 113

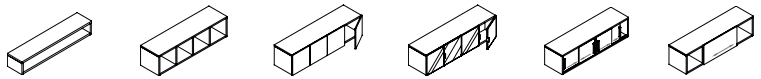

WWST HOW ARW ARWVS SDW SFW

Desk Hutches p. 119

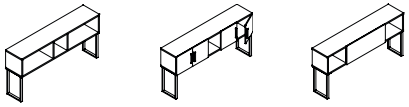

HOSB ARSB SFSB

Storage Hutches p. 122

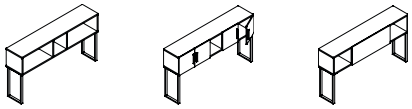

HOSH ARSH SFSH

Shared Desk Hutches p. 125

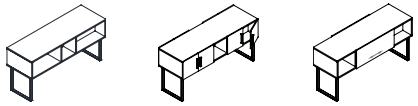

HODB ARDB SFDB

Shared Storage Hutches p. 128

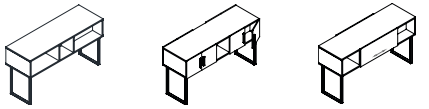

HODH ARDH SFDH

Collaborative Furniture

Collaborative and Multimedia Tables p. 132

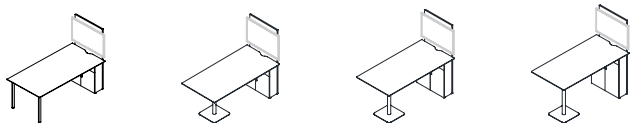

MP MT MB MG

Product Map

Divider Screens

Acrylic p. 137

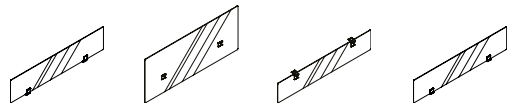

UAS | UAC | UAM | SAS

Laminate p. 141

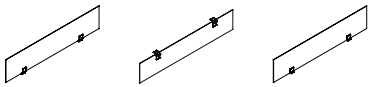

UMS | UMM | SMS

Tackboard p. 144

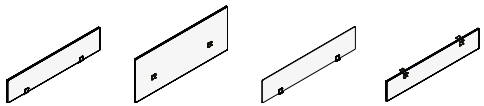

UBS | UBC | SBS | UBM

Electrical Accessories

Electrical Accessories p.159

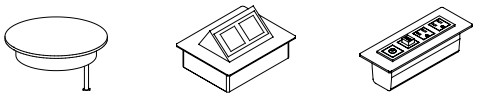

CQIBL | MH3 | MH4

Our social responsability

At Logiflex, we have chosen to be a responsible North American manufacturer by implementing initiatives for sustainable development. As much as possible, we source local materials and partner with suppliers who prioritize clean manufacturing processes. We also consolidate goods during transport to reduce ou fuel consumption and we continually make changes that help reduce our waste production.

The company is ISO 9001 certified.

You can consult our eco-responsible approach as well as all our certifications in the Certifications section of our website. Find out how our products can help you obtain LEED credits and the Logiflex products that are Indoor Advantage Gold certified.

Conditions of Sale

Prices

The amounts listed in this document are suggested retail prices and may be changed without notice. Applicable taxes are not included. If you have an open and active account with Logiflex, merchandise will be invoiced at the prices prevailing at the time of shipment. A deposit may be requested if the opening of your account has not been completed or if your account has become inactive.

Terms of Payment

Net 30 days F.O.B. Sherbrooke, Quebec. The invoice will be assigned the shipping date and is payable 30 days from that date. Logiflex remains the owner of the merchandise until the invoice is paid in full.

Customized Products (Special Items)

Price requests for customized products or special items can be submitted via the "Member Zone" section of our website, at www.logiflex.ca. Our quotations department will study your request and send you a quotation and a technical drawing for approval as soon as possible. Modifications to quotations or technical drawings can be requested the same way. The approved quotation(s) and technical drawing(s) can then be attached to your purchase order.

Orders

An official purchase order must be issued for all purchases. Your purchase order must contain the following information:

- Your company letterhead
- Your reference number
- The delivery address (with contact name, email and phone number)
- The complete product codes
- Furniture colour(s)
- Quantities
- Descriptions
- Retail prices and net prices
- Project registration number (if applicable), and your approved quotation and technical drawing (for special items).

Please note that a quotation cannot serve as a purchase order.

Returns

All returns must first be approved by Logiflex. If the return is accepted, a Logiflex customer service representative will send you an official return authorization form in order to facilitate procedures between you, the carrier, and the Logiflex merchandise reception clerk. Additional costs for shipping or other expenses may be applied following any merchandise returns.

Modifications and/or Cancellations

You have 48 hours from the time we acknowledge receipt of your order to make any requests for corrections or modifications. You may cancel your order during this same 48-hour period. If you would like to modify or cancel your order after this 48-hour verification period, please check with a Logiflex customer service representative. Orders cannot be changed or cancelled if production has already begun or if Logiflex has already received the raw materials.

Liability

Logiflex's liability ends once the carrier has delivered all items in good condition. A delivery receipt signed by the customer acknowledges that the shipment is complete and has been received in good condition.

Claims

Logiflex recommends inspecting the shipment before signing the carrier's delivery receipt. You must notify Logiflex of any incomplete shipments or damaged furniture within 30 days after delivery. Requests to replace damaged products can be made via the "Member Zone" section of our website, at www.logiflex.ca. Our after-sales service department will examine your request and help you correct the situation.

Changes

Logiflex reserves the right to make changes to the materials, accessories, components, specifications and designs, and to discontinue collections and/or models, at any time and without prior notice.

Storage and/or Shipping Fees

According to the terms Logiflex set forth in the transport policy. The transport policy can be consulted online in the Private Space.

Items Delivered Disassembled

Some items are delivered disassembled, such as empty desks, empty returns, bridges, arched tables, D, P or Q tables, lateral tables, end tables, hook tables, corner tables and extended-corner tables.

Warranty

Logiflex guarantees to the original purchaser that Logiflex products are free from defects in design, materials and workmanship for the product's lifetime, with certain exceptions.

You may consult the full warranty on the website: **Logiflex Warranty**

Manufacturing Standards

Knocked Down Furniture

Desks are delivered knocked down.

Top

Workstation worksurfaces are 1" thick.

Handles

Handles are included for all furniture items with doors or drawers, with the exception of wall cabinet units. The standard handle for laminate drawers and doors is H052CHR, but it is possible to specify an different handle model, at no extra charge. See Accessories on p. 149 for further details of the available handles. The standard handle for glass doors with aluminum frames is an aluminum handle built into the door.

Grommet

Grommet is included, except for rectangular and layering primary desks. The grommet is the CCPF. See Appx. B for further details.

Locks

Locks are optional, except for mobile pedestals, and come with a satin nickel finish. See Accessories on p. 154 for further details.

Drawers

All drawer interiors are constructed of 7/16" black panels and all drawer bottoms are made of 1/8" masonite panels.

Drawer Fronts

A PVC strip 1.5 mm thick is systematically applied along all drawer front edges.

Wood grain

Wood grain is vertically matched for all furniture fronts. See Appx. E for further details.

Levelers

All furniture items (except bridges) sit on 1" in diameter, white nylon levelers, allowing for up to 1-1/4" height adjustment.

Modesty panels

Modesty panels are optional, except for double desks, desks without metal legs and with at least one laminate leg. See Appx. D for further details on modesty panels.

Fronts

Fronts hide the surface for all storage units and towers. For all pedestal storage units and credenzas, the surface has a 5/8" lip and the furniture fronts are positioned under the surface.

Finishes

The metal legs and handles have a standard chrome finish. It is possible to specify another finish. See Appx. A for further details on the available metal finishes.

Support bar

The support bar is centered at 12" to the visitor side of the top when its included (see the Manufacturing Standards of the desk). Substract 13-1/2" to the total dept of the desk to know the clearance on the user side under the top.

How to Use the Price List

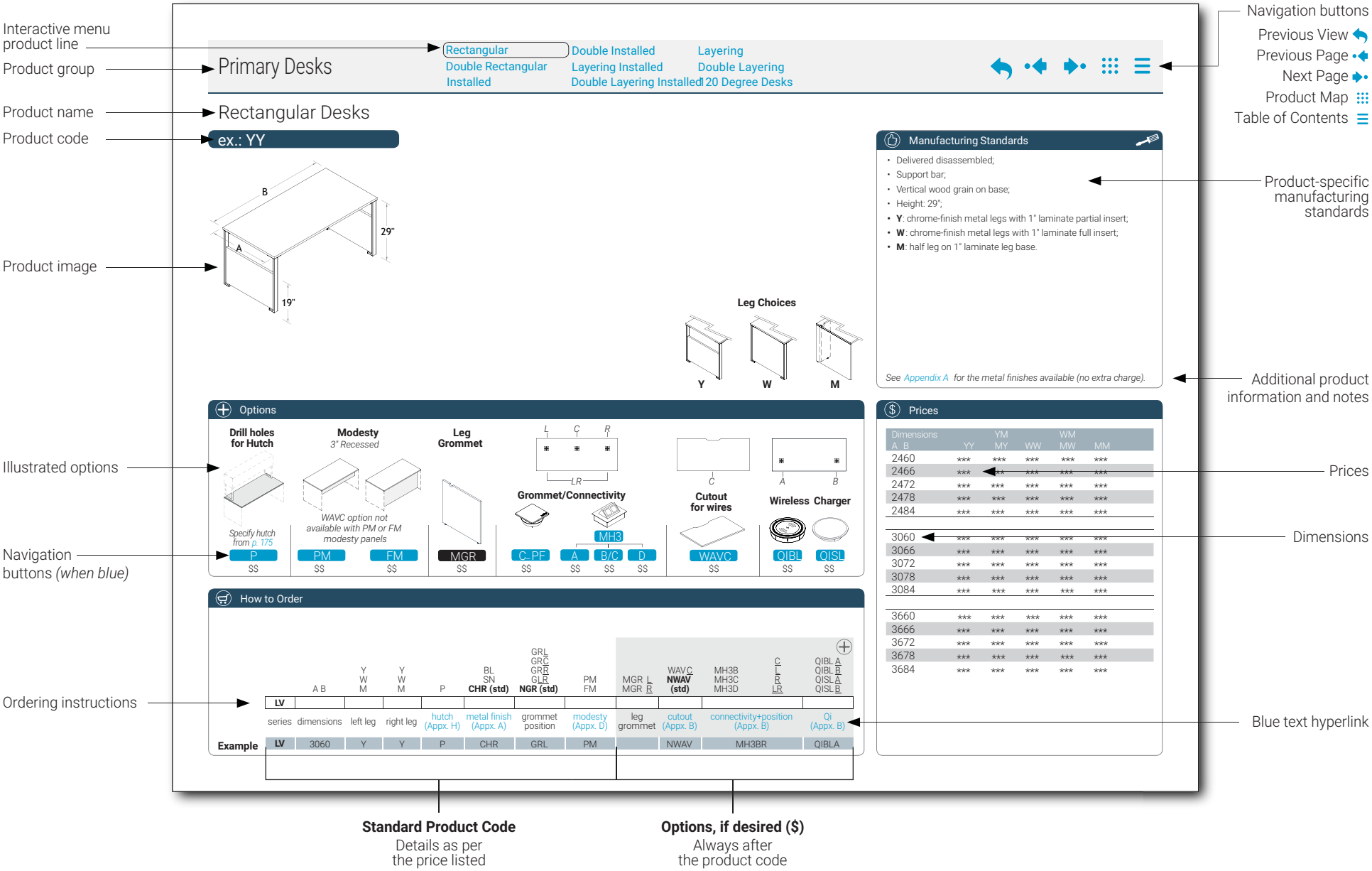

How to Order Double and Triple Desks

Choose the desired leg type and specify each desk leg **individually** on their respective "Order" lines.
Important Note: Shared legs must be the same on adjoining desks.

How to Order a Double Desk

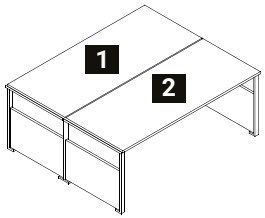

How to Order

		A B	YS MS WS	YS MS WS
1	LV			
2	LV			
	series	dimensions	left leg	right leg
Example 1	LV	3060	YS	YS
Example 2	LV	3060	YS	YS

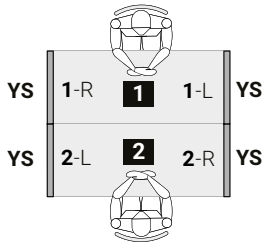

Shared Leg Choices

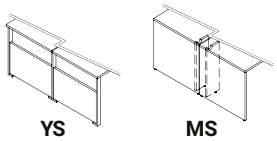

How to Order a Double 120 Degree Desk

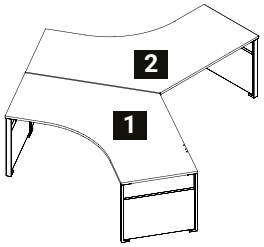

How to Order

		A B		YS WS MS Y W MM	YS WS MS Y W MM
1	LV		120DD		
2	LV		120DD		
	series	dimensions	code	left leg	right leg
Example 1	LV	3060	120DD	YS	Y
Example 2	LV	3060	120DD	Y	YS

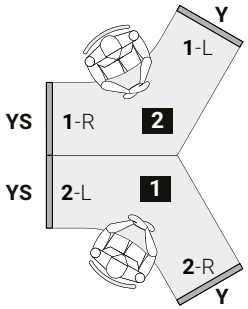

Shared Leg Choices

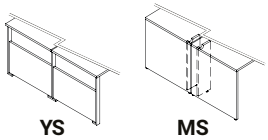

Single Leg Choices

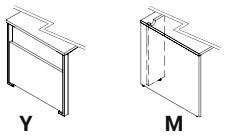

How to Order a Triple 120 Degree Desk

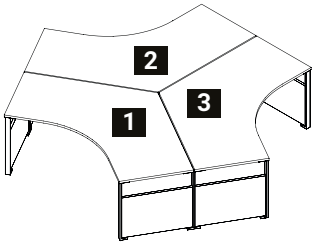

How to Order

		A B		WS MS YS	WS MS YS
1	LV		120DT		
2	LV		120DT		
3	LV		120DT		
	series	dimensions	code	left leg	right leg
Example 1	LV	3060	120DT	YS	YS
Example 2	LV	3060	120DT	YS	YS
Example 3	LV	3060	120DT	YS	YS

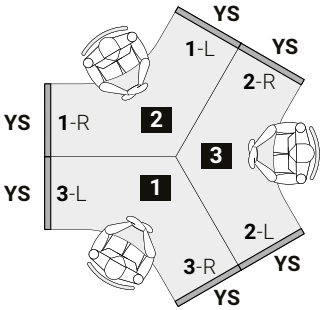

Shared Leg Choices

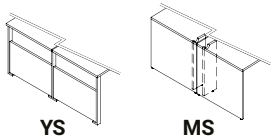

Appendix A: Colors and Finishes

How to specify your laminate colors

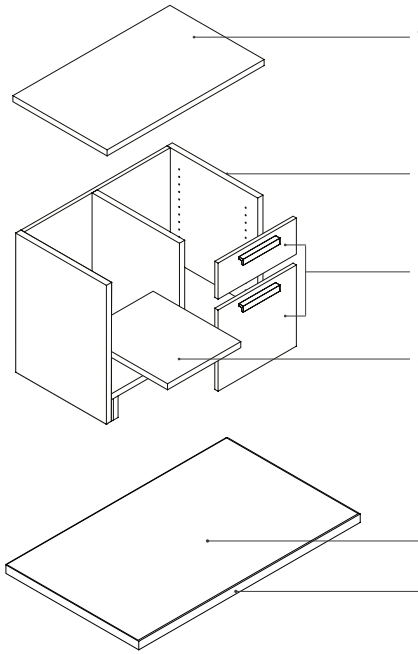

Metal Finishes

CHR	Chrome
SN	Satin Nickel
BL	Black
WH	White

Glass and Acrylic

V4	White Glass
V5	White Satin Glass
KB	Jet Black Glass
KS	Black Satin Glass
KE	Ocean Blue Glass
KO	Overseas Blue Glass
KR	Bright Red Glass
KM	Metallic Grey Glass
KA	Satin Silver Glass
KG	Satin Gold Glass
VS	Frosted Glass
PL	Frosted Acrylic

Availablility Chart

FINI FINISH	CODE	COLOR COULEUR	THICKNESS ÉPAISSEUR ⅝"	1"	1-⅝"	HPL STRATIFIÉ	PANVAL CODE
OMNIA	DOO	Dosha	•	•		•	K77
	COO	Cosmos	•	•		•	K78
AURA	GIA	Ginger Root | Gingembre	•	•		•	H72
	HAA	Haze | Brume	•	•	•	•	H57
	OHA	Ohm	•	•	•	•	K69
	STA	Storm | Tempête	•	•	•	•	H58
	TUA	Tundra	•	•		•	H75
LYRA	ASY	Asha	•	•		•	K47
	CIY	Chiffon | Mousseline **	•	•	•	•	K60
	KAY	Kali	•	•		•	K46
SUPERMAT	IGS	Ingot grey | Gris lingot	•	•			828
	WGS	Willow grey | Gris saule	•	•			802
DOLOMITE	AU	Audacity | Audace **	•	•	•	•	241
	B	Jet Black | Noir intense *	•	•		•	888 | S405-CA
	BC	Brown cherry | Cerisier brun	•	•	•	•	207
	C	Slate | Ardoise *	•	•		•	801
	DR	Driftwood | Bois de rive	•	•		•	744
	G	Mink Grey | Gris vison	•	•		•	805 | OU-927
	NM	Natural Maple | Érable naturel	•	•	•	•	206
	PO	Porto	•	•		•	913 | OU-648
	SW	Smoked Walnut | Noyer fumé	•	•	•	•	G21
	TO	Tobacco	•	•		•	205
	W	Polar White | Blanc polaire	•	•	•	•	555 | 459-CA
	WK	Whisky	•	•	•	•	245

* Non recommended color for work surfaces.
** For conference tables with 2 or more parts, we do not recommend the use of colors with irregular and contrasted woodgrain like Chiffon, Audacity or Coastal Pear as it results in a pronounced wood grain mismatch.

Colors may vary from 2% to 5% between tfl and hpl laminates due to different technical applications.

See our complete **Colors & Finishes Guide**

N New

Appendix B: Grommet and Communication Box

Grommet

C_PF

Square metal grommet in satin nickel, chrome and black finish

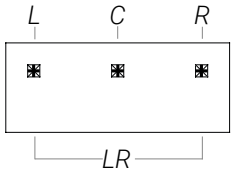

Position : L, R, C, LR

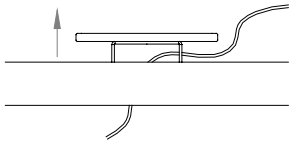

Open position
Allows wire management

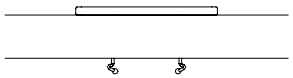

Closed position

When a desk is 24" deep, it is not recommended to order a grommet in the centred position because the available workspace is reduced. It is recommended to replace the centred grommet with a cutout for wires WAVC.

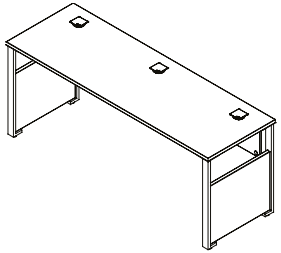

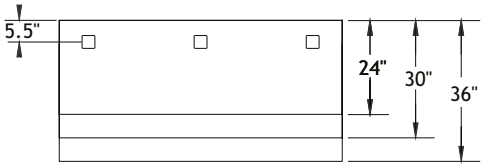

Cutout for wires

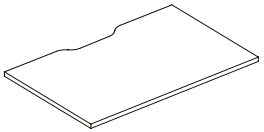

WAVC

Wire management cut-out

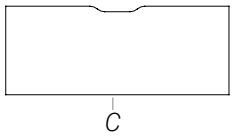

Position: C

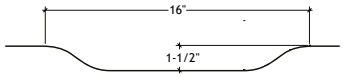

Dimensions

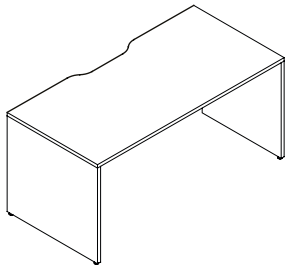

Connection Unit

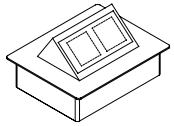

MH3

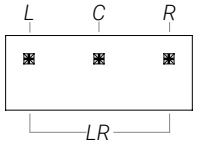

Position : L, R, C, LR

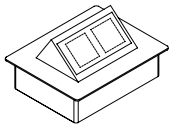

Open position
Push to open

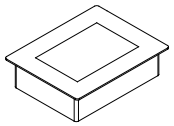

Closed position

Wireless Charger

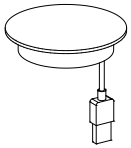

CQIBL

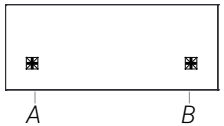

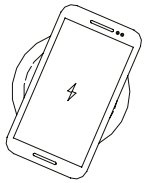

Charges CQi capable devises

Appendix C: Pedestal Cushion

Application

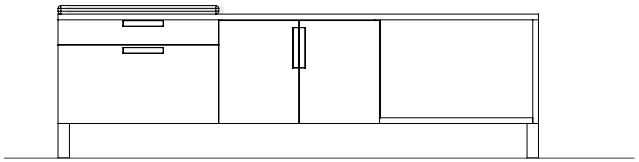

Left cusion (CL) on a high pedestal (UN02L)

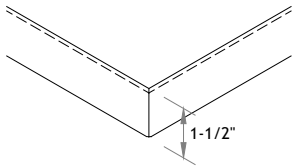

1-1/2" thick cushion with stiching on its perimeter and seam at the four corners.

Availability

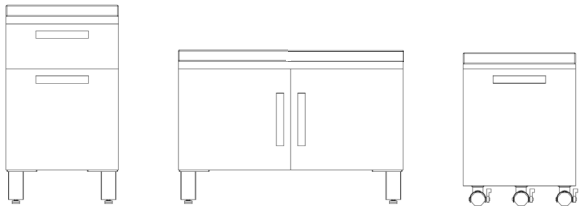

Available on all:

- High pedestals
- Low pedestals
- Mobile pedestals

Position

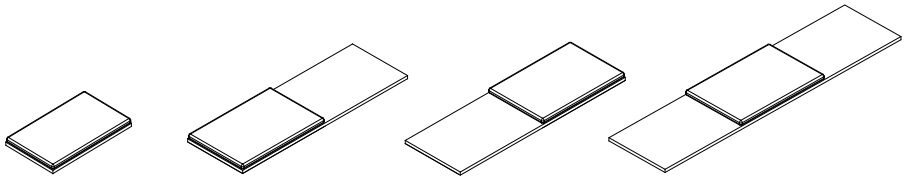

CF	CL	CR	CC
Cushion full length	Cushion on left	Cushion on right	Cushion centered

Attention: Specify cushion code along with its base storage to ensure the right dimensioning.

COM Fabric

number of yards required:

Depth	Width	Total
18", 20", 23"	24" - 36"	1
20"	48"	2
20"	60"	3

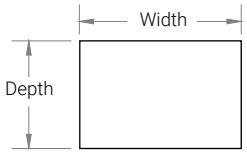

Upholstery Specification

Logiflex offers two options for upholstery specification:

Option 1 :	Customers may specify an upholstery from any supplier. Logiflex will then confirm upholstery grade and seat cost.
Option 2 :	Customers may select and purchase upholstery of their choice and ship upholstery to Logiflex (COM).

See next page for further details on these options).

Appendix C: Pedestal Cushion (continued)

Option 1 : Specified Upholstery

Customers may consult websites of our principal suppliers to visualize their complete product range. It is then possible to consult the graded-in list available on Logiflex.ca to be informed of the appropriate Logiflex grade.

Website of the upholstery supplier gives essential information to the maintenance, availability, quality and performance of the selected upholstery. In all cases, the upholstery supplier's warranty will apply.

Information to provide with the order:

Customer name
Purchase order number
Upholstery supplier name
Pattern name/number
Color name/number
Number of yards to order

Principal suppliers:

Momentum Textiles	themomgroup.com
Ennis Fabrics	jennisfabrics.com
Maharam	maharam.com
Designtex	designtex
Mayer Fabrics	mayerfabrics.com

Option 2 : Customer's Own Material (COM)

Logiflex offers the option of providing your own upholstery. The price will be based on the cushion grade 2.

Orders with a COM fabric must be written clearly and indicate the color, pattern, width of the fabric and the manufacturer or distributor. The customer is responsible for providing a 12" x 12" sample to Logiflex for approval of the upholstery and the COM Fabric Sample - Approval Form. Furthermore, Logiflex reserves the right to refuse any upholstery that does not meet Logiflex selection criteria.

COM fabrics must be delivered to the Logiflex factory with freight and duties paid. For COM orders, the order's delivery date is set once Logiflex has received all fabric rolls required for production, following sample approval. All charges to COM acquisition on the customer's behalf will be passed onto the customer.

Logiflex does not assume responsibility for upholstery availability, quality, perfomance or appearance. In addition, the Logiflex warranty excludes customer's own materials.

The following information must be included with the COM upholstery delivery and be communicated to the account manager along with the purchase order:

Customer name
Purchase order number
Upholstery supplier name
Pattern name/number
Color name/number
Number of yards delivered

COM Fabric Sample - Approval Form

Shipping adress:

Logiflex
Attn: Receiver
1235 St-Roch North Road
Sherbrooke Quebec
Canada J1N 0H2

Consult Logiflex's Upholstery Guide for more details.

Appendix D: Modesty Panel

Modesty Height

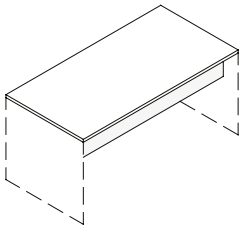

PM
Partial Modesty
(10" high)

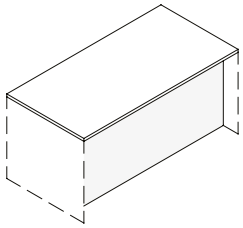

FM
Full Modesty

Recessed

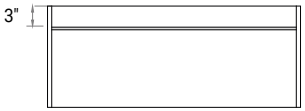

Top View

Recessed 3" for:

- Rectangular primary desks
- Layering primary desks.

Top View

No recess for:

- Returns
- Secondary desks
- Bridges

Appendix E: Wood Grain

Wood grain is vertically matched for all furniture fronts. See image below for wood grain direction placements.

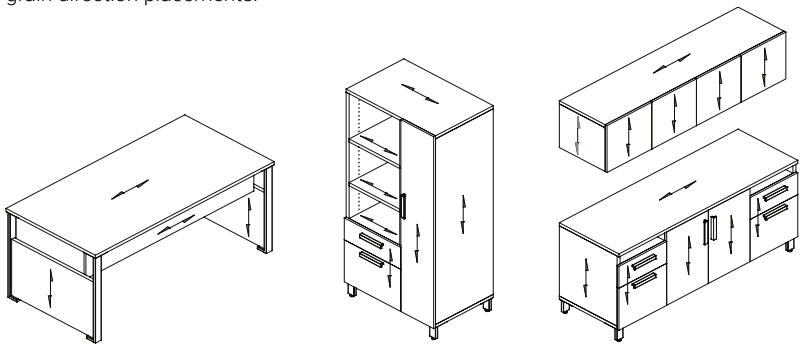

Appendix F: Utility and File Drawers

Utility Drawers

30" and 36" wide utility drawers have standard built-in dividers.

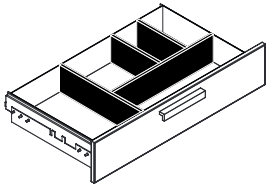

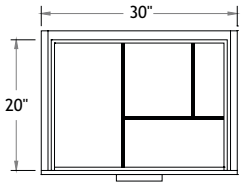

Top View

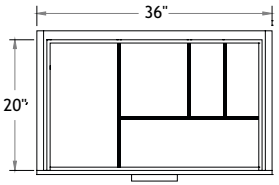

Top View

File Drawers

File drawers can receive either legal or letter formats. Please refer to the illustration below.

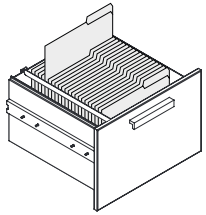

Letter format

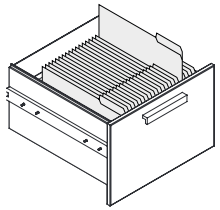

Legal format

Lateral File Drawers

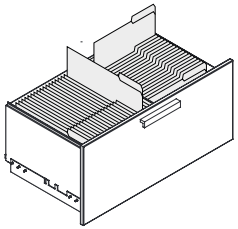

Legal and Letter formats

*For solidity purposes, ensure all files are suspended.

Appendix G: Layering Desk Supports

Layering desks may be supported by different pieces of furniture such as 27" high secondary desks, as well as 25" high storage pedestals. Four types of support devices are offered. Four types of supports are offered in the same finish as the surface.

Application examples

B1

1" thick support device to be used with 27"H secondary desks

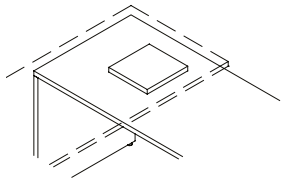

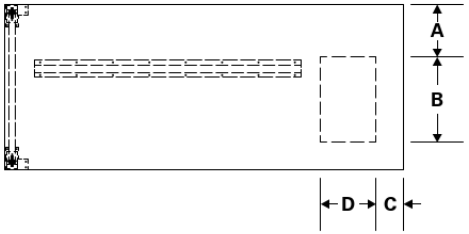

	Dimensions			
Desk depth	A	B	C	D
24"	9 1/2"	9 1/2"	5"	10"
30"	9 1/2"	15 1/2"	5"	10"
36"	9 1/2"	21 1/2"	5"	10"

B3

3" thick support device to be used with 25"H storage pedestals

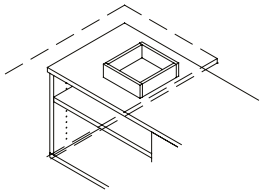

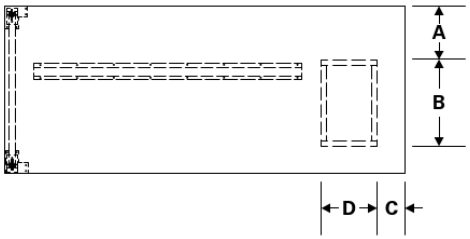

	Dimensions			
Desk depth	A	B	C	D
24"	9 1/2"	9 1/2"	5"	10"
30"	9 1/2"	15 1/2"	5"	10"
36"	9 1/2"	21 1/2"	5"	10"

PG

3" thick pigeon hole unit to be used with 25"H storage pedestals

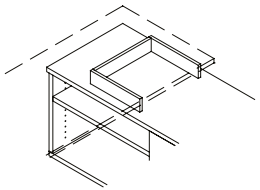

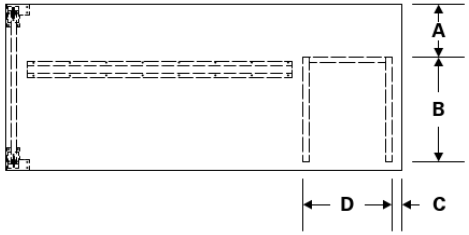

	Dimensions			
Desk depth	A	B	C	D
24"	9 1/2"	13"	2"	16"
30"	9 1/2"	19"	2"	16"
36"	9 1/2"	25"	2"	16"

DR

3" thick drawer unit to be used with 25"H storage pedestals
Interior dimensions of the drawer: 9 3/8"P X 11 11/16"L

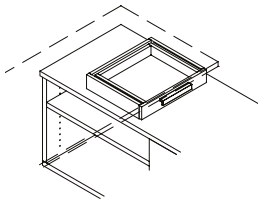

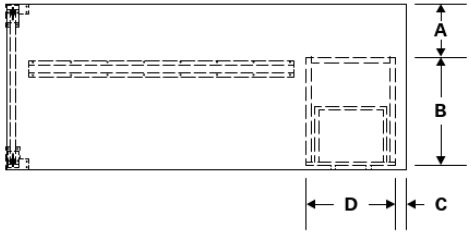

	Dimensions			
Desk depth	A	B	C	D
24"	9 1/2"	13 5/8"	2"	16"
30"	9 1/2"	19 5/8"	2"	16"
36"	9 1/2"	25 5/8"	2"	16"

Appendix H: Hutch Applications

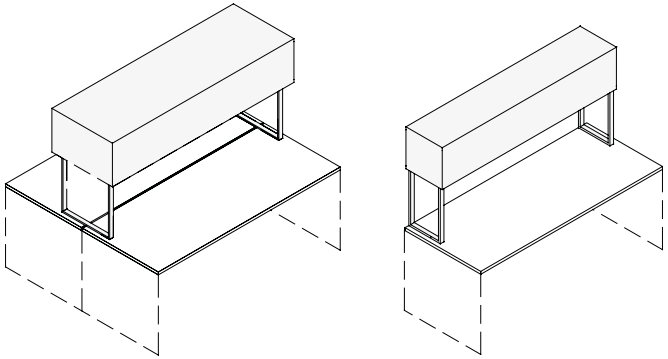

Hutches are recessed 1/4" from surfaces they are installed on.

P

Desk Application

To apply a hutch on an applicable work surface indicate "P" in the order line.

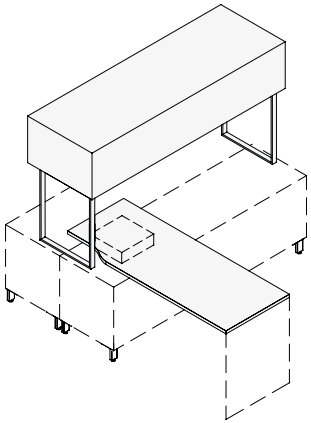

E

Layering Desk Application

On a layering desk, a cutout can be made by indicating "E" in the order line.

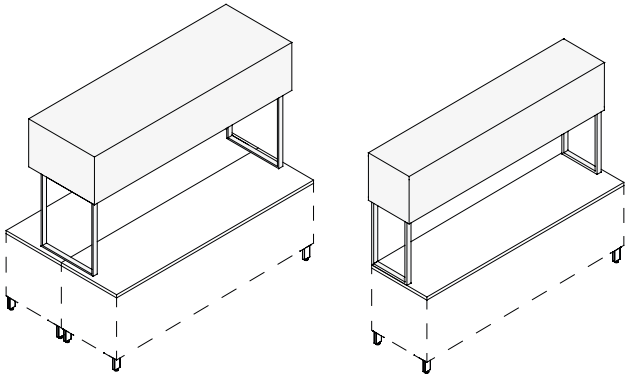

Note: *Hutches are recessed 1/4" from surfaces they are installed on.*

P

High Pedestal Application

To apply a hutch on a high pedestal application indicate "P" in the order line.

Appendix I: Divider Screens

Under Mount Clip Applications

Code Definitions

Clip	Insertion	Position	Illustration
U Under Mount	**A** Acrylic (C1) 1/4”	**S** Surface	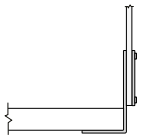
		C Centered	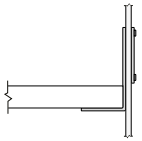
	M Laminate 5/8”	**M** Modesty	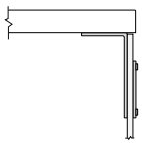
	B Tackboard 7/8” (+/- 1/8”)	**HS** Desk Hutch	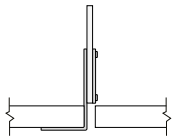

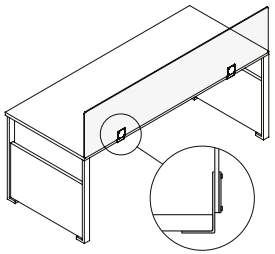

UAS UMS UBS

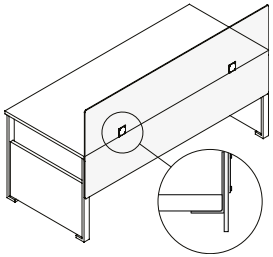

UAC UBC

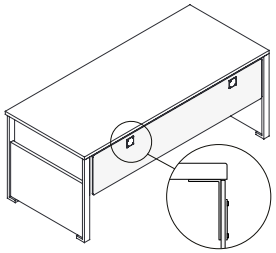

UAM UMM UBM *

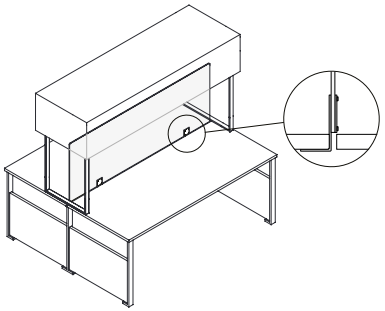

UMHS UBHS *

Surface Mount Clip Applications

Code Definitions

Clip	Insertion	Position	Illustration
S Surface Mount	**A** Acrylic (C1) 1/4”	**S** Surface	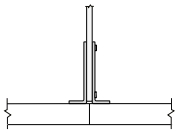
	M Laminate 5/8”	**HP** Storage Hutch	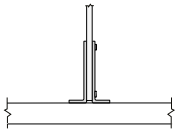
	B Tackboard 7/8” (+/- 1/8”)		

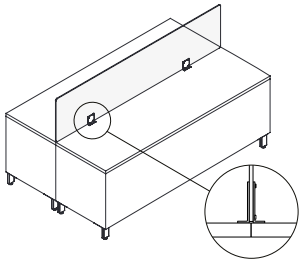

SAS SMS SBS

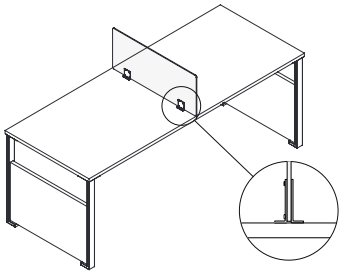

SAS SMS SBS

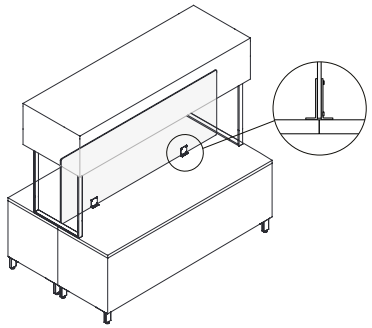

SAHP SMHP SBHP *

***Note:** When ordering a divider screen that is between two metal legs, the total length is 6” shorter than the length of the hutch because of the width of the legs.

Appendix J: Calculation/Use of Electrical Components

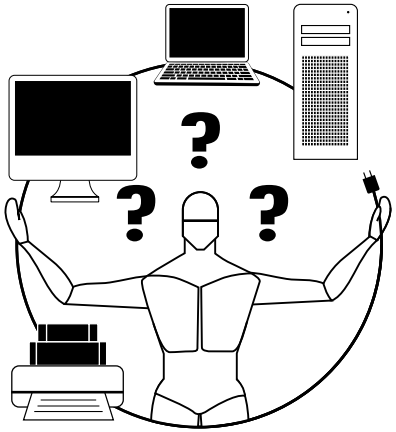

An Introduction to Calculation and Use of Electrical Components

Most people are uncomfortable with anything related to electricity. This step-by-step guide is intended for people who are not familiar with electrical installations but who have to specify what system they need when ordering furniture. In this guide, you will learn how to choose and specify the electrical components required for your projects. The list that follows illustrates and identifies each product and describes its applications.

The electrical components are all recognized by the Underwriters Laboratory (UL) as office furniture accessories and are manufactured according to Canadian Standards Association (CSA) and UL electrical standards.

Note: All electrical connections must be performed by a certified electrician.

By following these 3 simple steps, you can easily determine the number of circuits required to ensure safe use of your electrical system.

1. Determing the Number of Amperes Required
2. Calculating the Total Amperes
3. Determing How Many Circuits You Need

STEP 1:
Determing the Number of Amperes Required

What is Amperage
An Ampere (Amp or A) is a unit for measuring the rate at which electric current flows. All electrical equipment has an amperage rate. By following these few simple steps, you can easily determine the number of circuits required to ensure safe use of your electrical equipment.

Determine the Number of Amperes Required
On your computer or other electric devices (ie: monitor, central processing unit, printer) find the plate that provides the technical specifications as follows:

Input: 120V - 1.8A.

If you cannot locate this information on the machine, you will probably find it in the user manual.

Here are a few examples of how many Amps some equipment may consume. Please note that these are examples and the number of amperes may vary from one machine to another.

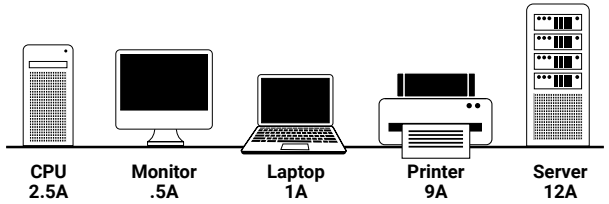

Electrical System Capacity

Our electrical system is designed for circuits of 20 amps each. This includes electrical components such as computers, printers, laptops, monitors, server or other devices.

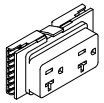

20A

A single Duplex has a maximum capacity of 20 A

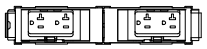

Each power block can hold 2 Duplex

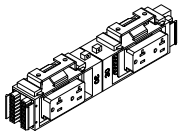

Each power block can hold 4 Duplex

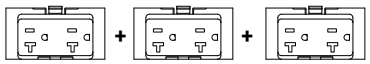

If the duplexes are connected to the same circuit, the capacity is divided between them. For example, 3 duplexes connected to the same circuit have a total capacity of 20A.

Appendix J: Calculation and Use of Electrical Components

STEP 2:
Calculating the Total Amperes

Add the Amperes

Add the number of amps for each machine. In our example, there are 4 CPUs at 2.5A per computer, 4 monitors at 0.5A and one printer at 9A.

2.5A + .5A + 2.5A + .5A + 2.5A + .5A + 2.5A + .5A + 9A = **21A**

The total number of amperes used in this example equals to 21A.

Divide by 16

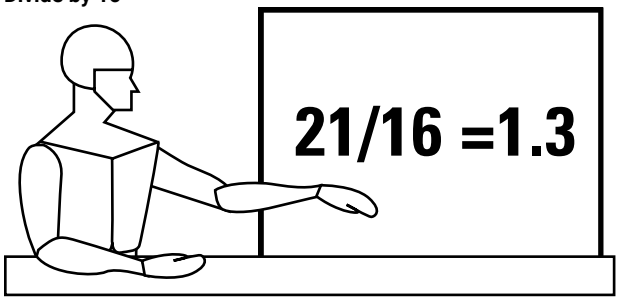

Most machines and computers used in offices or schools are used continuously for many hours at a time. In this type of situation, national electrical codes usually limit circuits at 80% of their capacity of continuous use. Our electrical system is designed for circuits of 20 amps each. So 80% of 20A is 16 Amps You must therefore divide the total number of amperes calculated by 16.

STEP 3:
Determing How Many Circuits You Need

In most cases, this number will contain decimals. Round up to the next whole number, and this will be the number of circuits required for your equipment to run safely. If the number obtained is higher than 4 (the maximum number of circuits for a system), you must reduce the total amperage or add another electrical system. Continuing with our example, the 1.3A is rounded up to 2A.

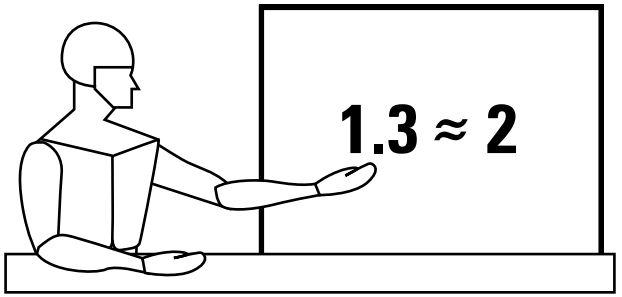

Here is one possible configuration. Using 5 power blocks joined together with junction cables, only 2 circuits are being used. The 4 workstations would be on the first circuit for a total of 16 amps. The printer would be on the second circuit.

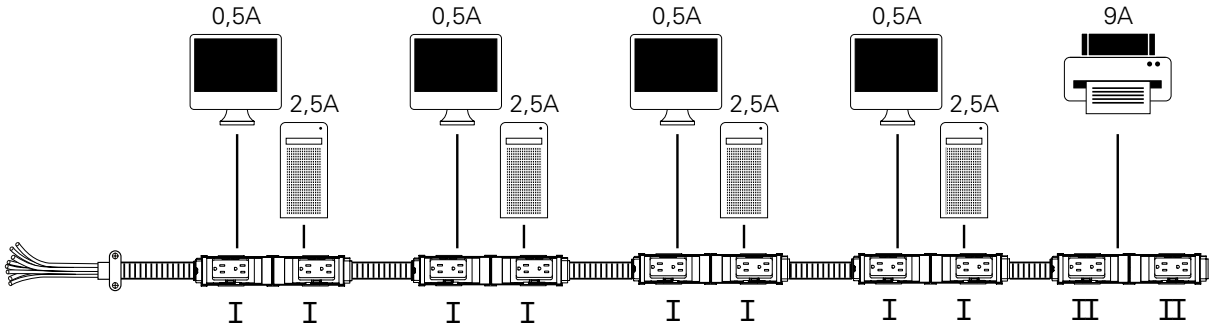

Appendix J: Calculation and Use of Electrical Components

8 Wire, 4 Circuit (3+1) Power Block

- Duplex are interchangable permitting any required circuit combination;
- Blocks for single or double sided applications;
- Complies with National Electric Code;
- UL Listed/Recognized.

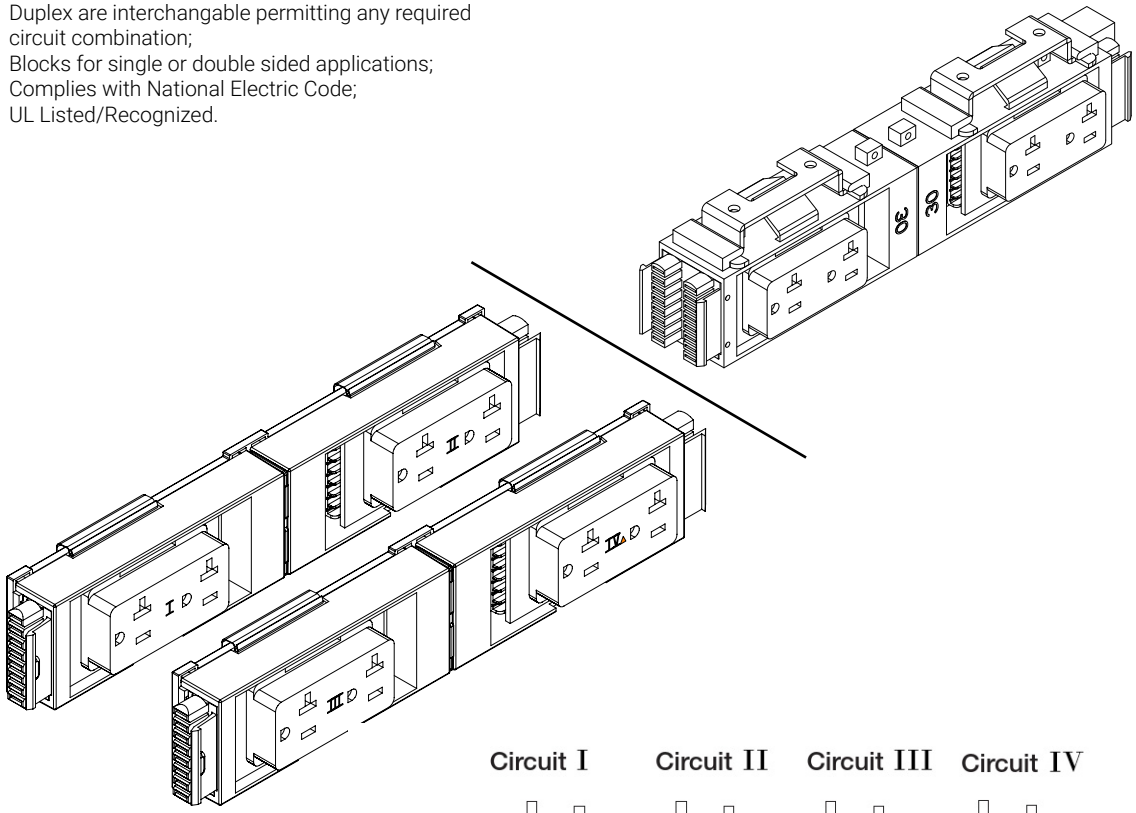

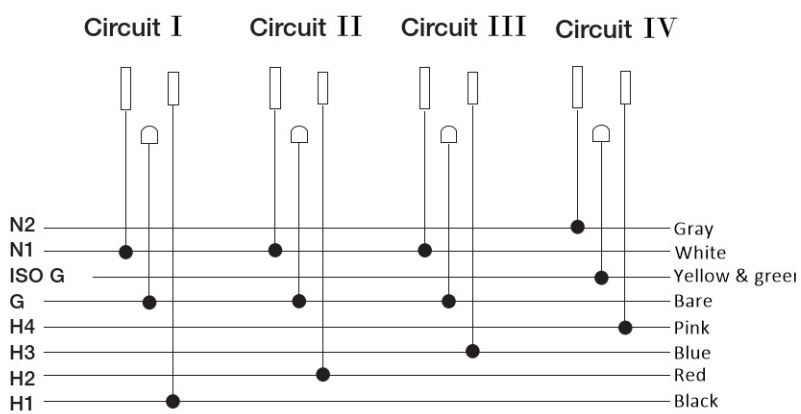

Starter Cable with Hardwire

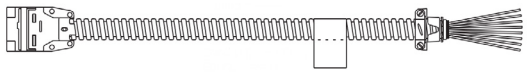

- 4 circuit starter cable with hardwire at one end;
- 4 circuits rated for 20 AMP each;
- Available in lengths from 12"to 180";
- Whip end to be connected to building power by an electrican.

Starter Cable with Plug

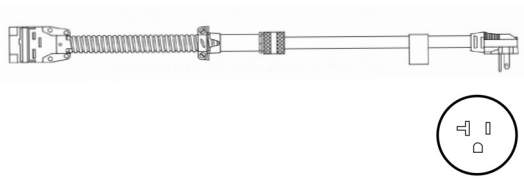

- 1 circuit starter cable with 20A electrical plug;
- Circuit rated for 20 AMP;
- Available in lengths from 36"to 180".

Junction Cable

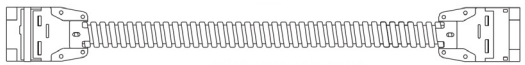

- 4 circuit cord;
- All circuits rated for 20 AMP;
- Available in lengths from 12"to 216".

Appendix K: Electrical Wire Management Solutions

Electricity for Floor Storage

The high pedestal construction can be adapted to accomodate different electrical configurations of work stations.

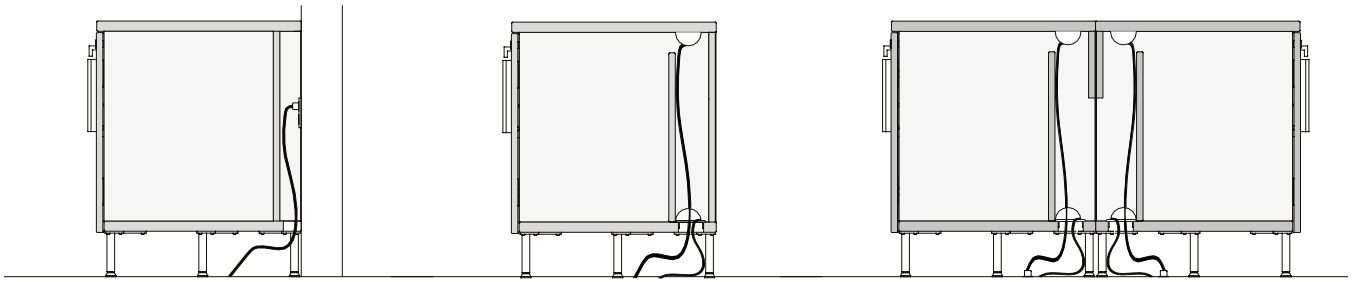

EM

Wall Power

- Back recessed by 2" to clear wall outlets;
- WAV grommet in the base of the unit to pass cables.

EH

Concealed Power

- Full back;
- 2-1/2" round grommet on the top of the unit;
- Removable panel at the back of bookcase or open sections to access cables from the front of the unit;
- 2-1/2" round grommet in the base of the unit, on the left and right;
- Half-round grommet at the top and bottom of each division panel between each section of the unit.
- Units with shelves: the shelf will be removed and the space converted to open storage.

EC

Central Power

- Open back;
- 2-1/2" round grommet on the top of the unit;
- Removable panel at the back of storage space to access cables from the front of the unit;
- 2-1/2" round grommet in the base of the unit, on the left and right;
- Half-round grommet at the top and bottom of each division panel between each section of the unit.
- Units with shelves: the shelf will be removed and the space converted to open storage.

Appendix K: Electrical Wire Management Solutions

Example: High Pedestal with EC option - open back

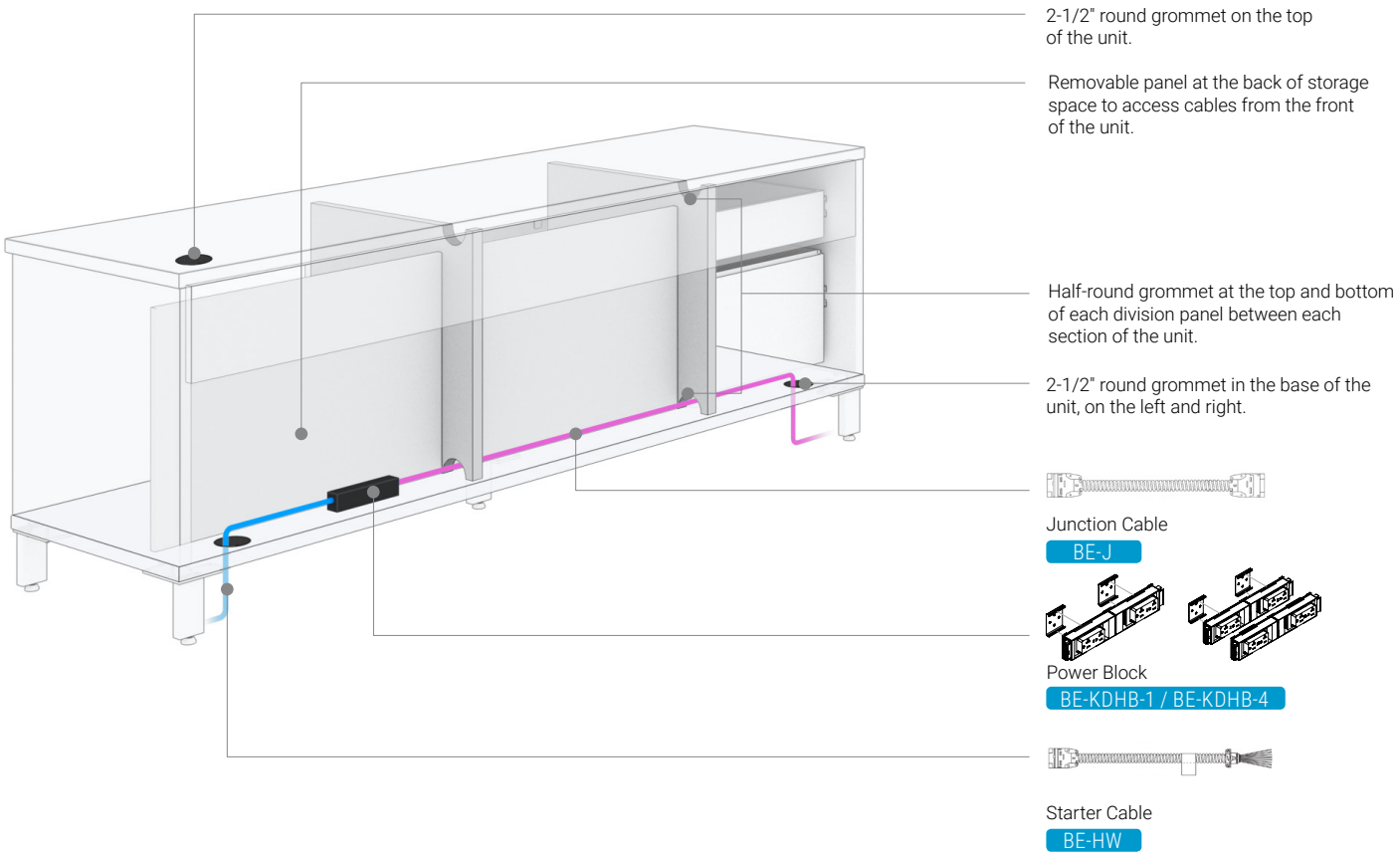

CHICAGO CODE

There is a specific norm about Chicago electrical components. Some of our products are approved, but not all of them.

CHI If you see this logo in Accessories, this means the product is **NOT** approved in Chicago. More info here.

Appendix K: Electrical Wire Management Solutions

Electrical configurations for Benching

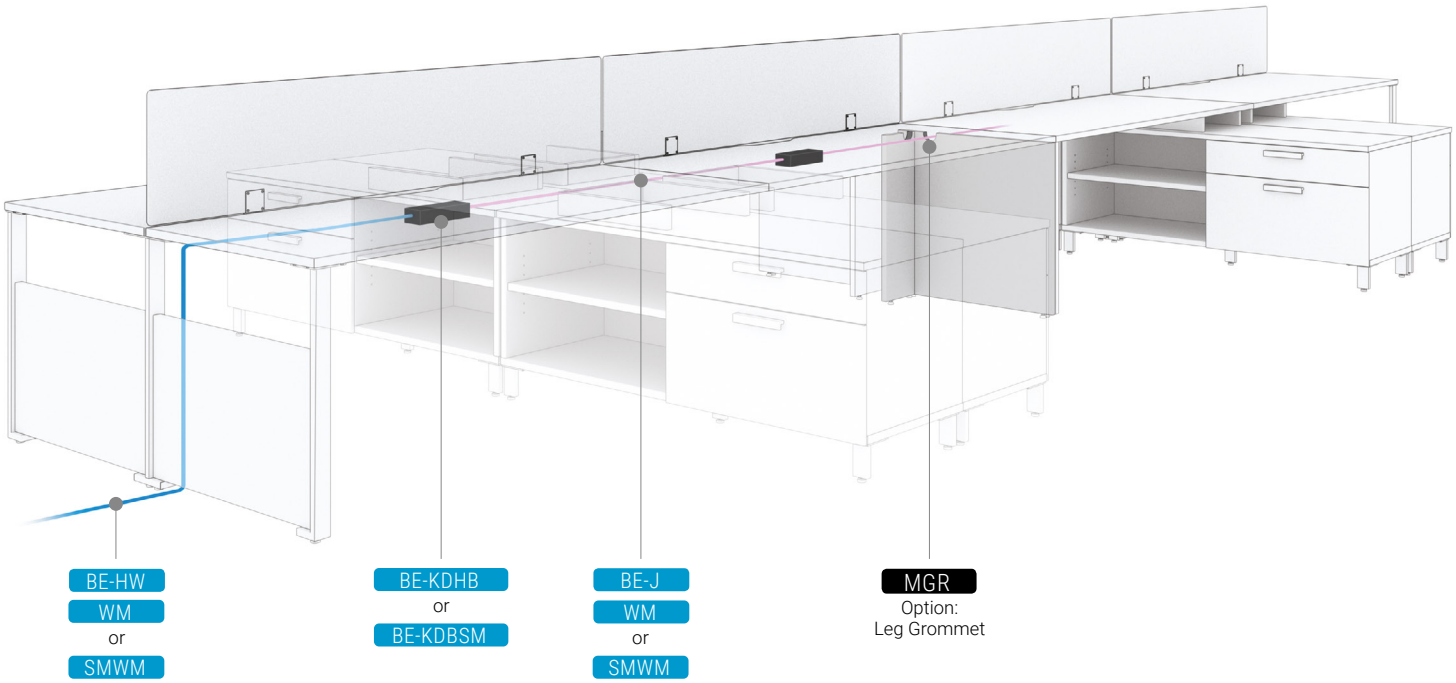

Electrical Accessories

Starter Cable	Mounting Bracket with Power Block		Cable Support with Power Block	Junction Cable	Velcro Tie	Cable Support
	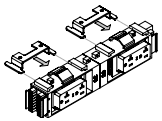		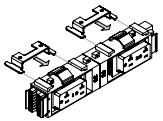			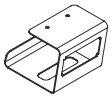
BE-HW	BE-KDBSM-1	or	BE-KDBSM-4	BE-J	WM	SMWM

Options

Leg Grommet

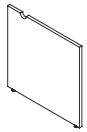

MGR

Appendix K: Electrical Wire Management Solutions

Electrical configurations for Focus

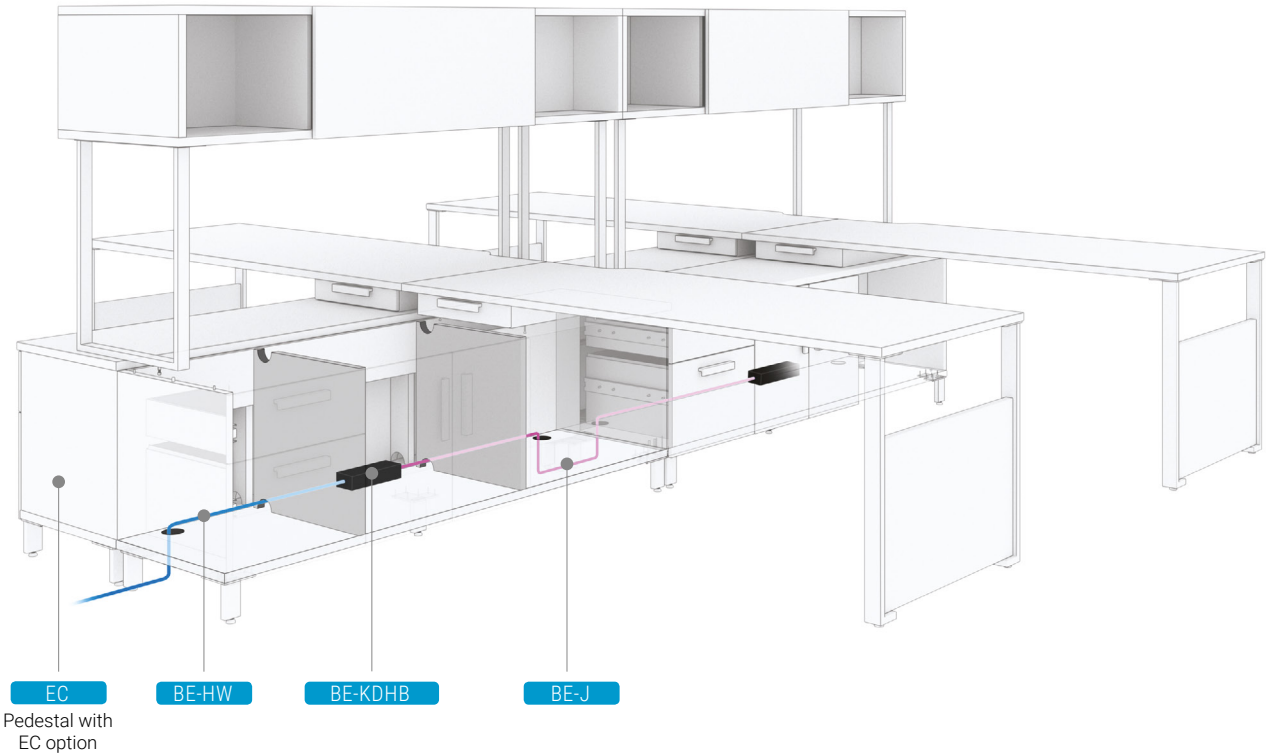

Electrical Accessories

Starter Cable

BE-HW

Mounting Bracket with Power Block

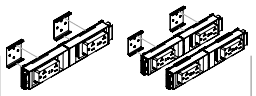

BE-KDHB-1 / BE-KDHB-4

Junction Cable

BE-J

Options

Central Power Open Back

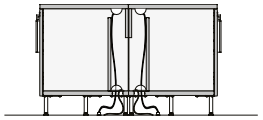

EC

Appendix K: Electrical Wire Management Solutions

Electrical configurations for Collaborative and Multimedia Tables

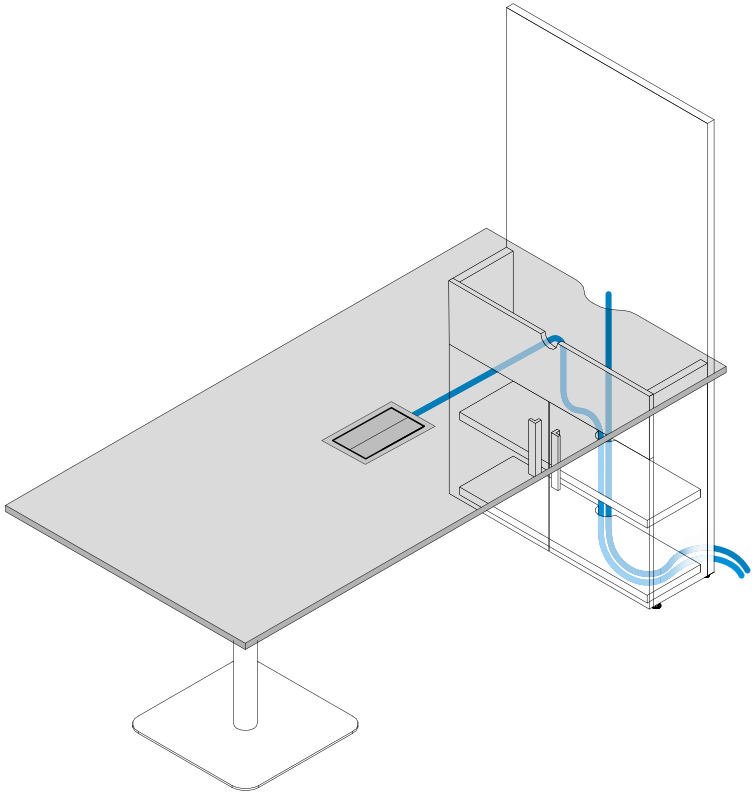

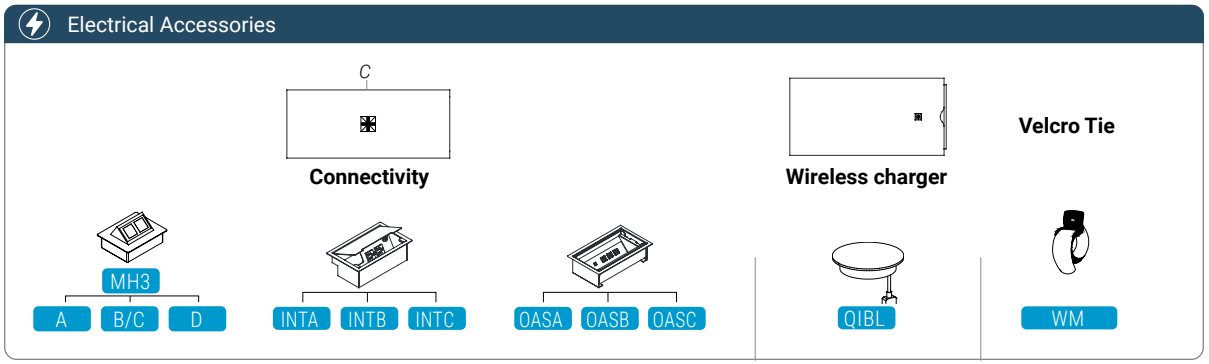

Desks / Individual

Rectangular Desks

ex.: YY

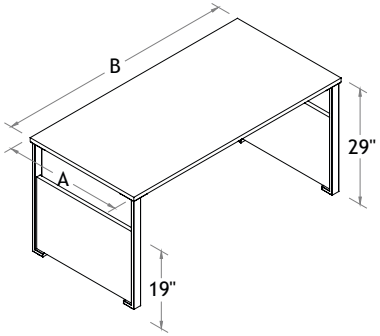

Leg Choices

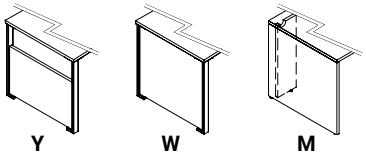

Manufacturing Standards

- Delivered disassembled;
- Support bar;
- Vertical wood grain on base;
- Height: 29";
- **Y**: chrome-finish metal legs with 1" laminate partial insert;
- **W**: chrome-finish metal legs with 1" laminate full insert;
- **M**: half leg on 1" laminate leg base.

Electrical management: use metal channels to fix electricity under the surface, melamine does not serve as a channel.

See Appendix A for the metal finishes available (no extra charge).

Options

Drill holes for Hutch

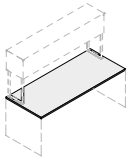

Specify hutch from p. 119

P — $0

Modesty
3" Recessed

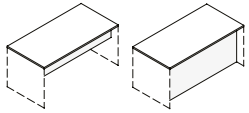

WAVC option not available with PM or FM modesty panels

PM — $191
FM — $191

Leg Grommet

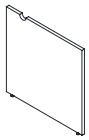

MGR — $0

Grommet/Connectivity

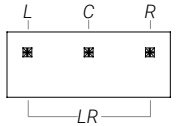

MH3

C_PF — $28 ea.
A — $434
B/C — $434
D — $434

Cutout for wires

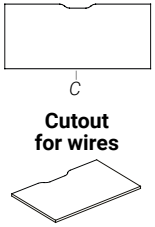

WAVC — $28 ea.

Wireless Charger

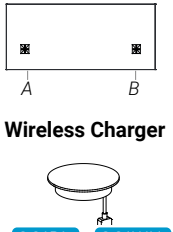

CQIBL — $128
CQIWH — $128

Prices

Dimensions A B	YY	YM MY	WW	WM MW	MM
2460	1137	1067	1137	1067	628
2466	1196	1125	1196	1125	639
2472	1208	1138	1208	1138	651
2478	1231	1161	1231	1161	664
3060	1193	1118	1193	1118	667
3066	1252	1179	1252	1179	678
3072	1268	1198	1268	1198	690
3078	1293	1220	1293	1220	708
3660	1246	1172	1246	1172	706
3666	1310	1238	1310	1238	719
3672	1331	1255	1331	1255	734
3678	1355	1283	1355	1283	750

How to Order

		A B	Y W M	Y W M	P	WH BL SN **CHR (std)**	GRL GRC GRR GLR **NGR (std)**	PM FM	MGR L MGR R MG LR	WAVC **NWAV** **(std)**	MH3B MH3C MH3D	C L R LR	CQIBLA CQIBLB
	LV												
	series	dimensions	left leg	right leg	hutch (Appx. H)	metal finish (Appx. A)	grommet position	modesty (Appx. D)	leg grommet	cutout (Appx. B)	connectivity+position (Appx. B)		Qi (Appx. B)
Example	**LV**	3060	Y	Y	P	CHR	GRL	PM		NWAV	MH3BR		CQIBLA

Layering Desks

ex.: YF

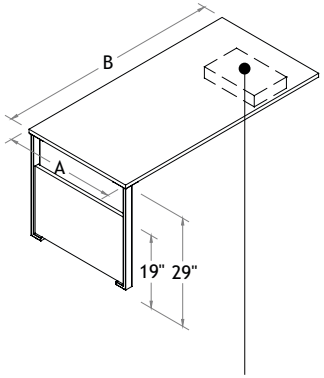

Choice of four supports:
B1, B3, PG and DR
(see Appendix G)

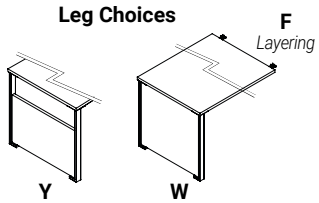

Manufacturing Standards

- Delivered disassembled;
- Chrome-finish metal legs with 1" laminate partial (Y) or full (W) insert;
- Support bar;
- Vertical wood grain on base;
- Height: 29";
- **Y**: chrome-finish metal legs with 1" laminate partial insert;
- **W**: chrome-finish metal legs with 1" laminate full insert.

Electrical management: use metal channels to fix electricity under the surface, melamine does not serve as a channel.

See Appendix A for the metal finishes available (no extra charge).

Options

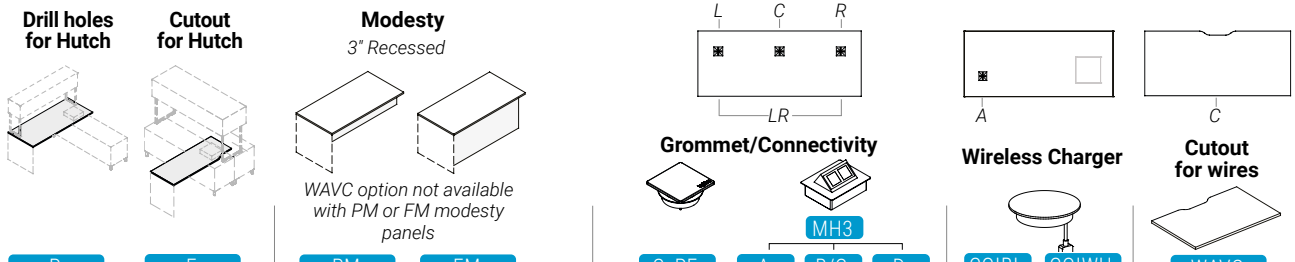

Prices

Dimensions A	B
2460	1046
2466	1109
2472	1137
2478	1165
2484	1176
3060	1097
3066	1160
3072	1188
3078	1220
3084	1235
3660	1142
3666	1208
3672	1242
3678	1276
3684	1293

How to Order

		A B	Y W	F	E P	WH BL SN **CHR (std)**	B1 B3 PG DR	GRL GRC GRR GLR **NGR (std)**	PM FM	WAVC **NWAV (std)**	MH3B MH3C MH3D	C L R LR	CQIBLA
	LV												
	series	dimensions	leg on left	leg on right	hutch (Appx. H)	metal finish (Appx. A)	support (Appx. G)	grommet position	modesty (Appx. D)	cutout (Appx. B)	connectivity+position (Appx. B)		Qi (Appx. B)
Example	**LV**	3060	Y	F	P	CHR	DR	GRL	PM	NWAV	MH3BR		CQIBLA

Layering Desks

ex.: FY

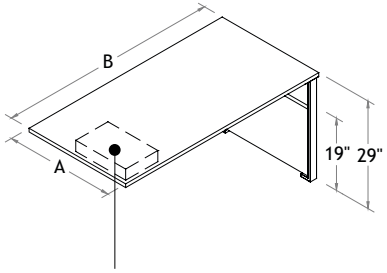

Choice of four supports:
B1, B3, PG and DR
(see Appendix G)

Leg Choices

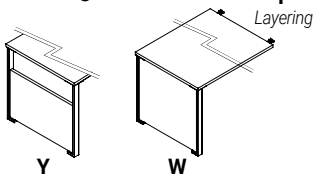

Manufacturing Standards

- Delivered disassembled;
- Chrome-finish metal legs with 1" laminate partial (Y) or full (W) insert;
- Support bar;
- Vertical wood grain on base;
- Height: 29";
- **Y**: chrome-finish metal legs with 1" laminate partial insert;
- **W**: chrome-finish metal legs with 1" laminate full insert.

Electrical management: use metal channels to fix electricity under the surface, melamine does not serve as a channel.

See Appendix A for the metal finishes available (no extra charge).

Options

Drill holes for Hutch

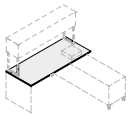

P

Cutout for Hutch

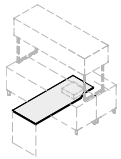

E

Specify hutch starting on p. 119

Modesty

3" Recessed

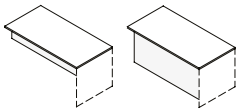

WAVC option not available with PM or FM modesty panels

PM	FM
$191	$191

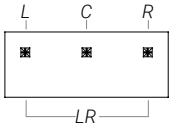

Grommet/Connectivity

MH3

C_PF	A	B/C	D
$28 ea.	$434	$434	$434

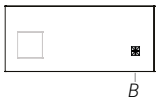

Wireless Charger

CQIBL	CQIWH
$128	$128

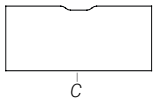

Cutout for wires

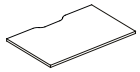

WAVC

$28 ea.

Prices

Dimensions A	B
2460	1046
2466	1109
2472	1137
2478	1165
2484	1176
3060	1097
3066	1160
3072	1188
3078	1220
3084	1235
3660	1142
3666	1208
3672	1242
3678	1276
3684	1293

How to Order

		A B	F	Y W	E P	WH BL SN **CHR (std)**	B1 B3 PG DR	GRL GRC GRR GLR **NGR (std)**	PM FM	WAVC **NWAV (std)**	MH3B MH3C MH3D	C L R LR	CQIBLB
	LV												
	series	dimensions	leg on left	leg on right	hutch (Appx. H)	metal finish (Appx. A)	support (Appx. G)	grommet position	modesty (Appx. D)	cutout (Appx. B)	connectivity+position (Appx. B)		Qi (Appx. B)
Example	**LV**	3060	F	Y	P	CHR	DR	GRL	PM	NWAV	MH3BR		CQIBLB

Layering Desks

MF

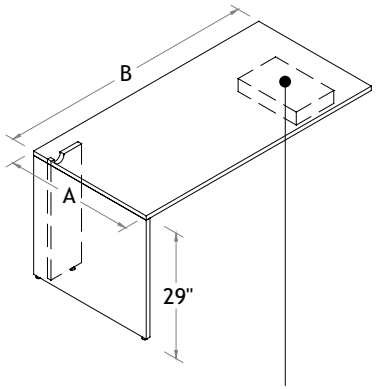

Choice of four supports:
B1, B3, PG and DR
(see Appendix G)

Manufacturing Standards

- Delivered disassembled;
- Half leg on 1" laminate leg base;
- Support bar;
- Vertical wood grain on base;
- Height: 29".

Electrical management: use metal channels to fix electricity under the surface, melamine does not serve as a channel.

Options

Drill holes for Hutch

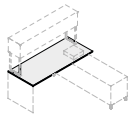

P

Cutout for Hutch

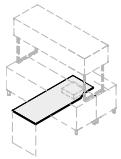

E

Specify hutch starting on p. 119

Modesty
3" Recessed

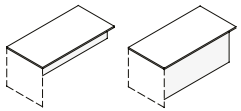

WAVC option not available with PM or FM modesty panels

PM $191 | FM $191

Leg Grommet

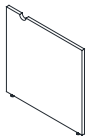

MGR $0

Grommet/Connectivity

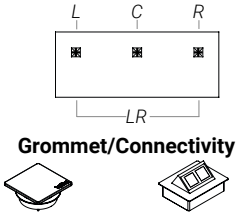

C_PF $28 ea. | A $434 | B/C $434 | D $434

Wireless Charger

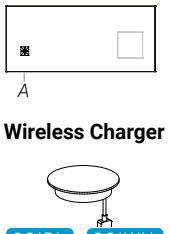

CQIBL $128 | CQIWH $128

Cutout for wires

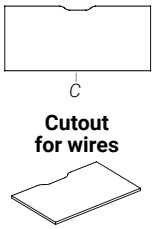

WAVC $28 ea.

Prices

Dimensions A	B
2460	729
2466	741
2472	754
2478	766
2484	779
3060	766
3066	779
3072	796
3078	813
3084	824
3660	804
3666	819
3672	838
3678	857
3684	872

How to Order

	A B		E P	B1 B3 PG DR	GRL GRC GRR GLR **NGR (std)**	PM FM	MGR L	WAVC **NWAV (std)**	MH3B MH3C MH3D	C L R LR	CQIBLA
LV		**MF**									
series	dimensions	product	hutch (Appx. H)	support (Appx. G)	grommet position	modesty (Appx. D)	leg grommet	cutout (Appx. B)	connectivity+position (Appx. B)		Qi (Appx. B)
Example **LV**	3060	**MF**	P	DR	GRL	PM	MGRL	NWAV	MH3BR		CQIBLA

Layering Desks

FM

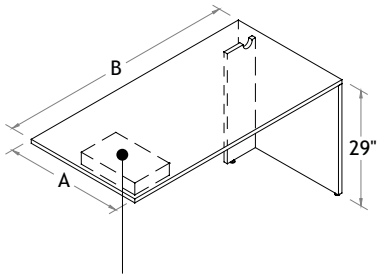

Choice of four supports:
B1, B3, PG and DR
(see Appendix G)

Manufacturing Standards

- Delivered disassembled;
- Half leg on 1" laminate leg base;
- Support bar;
- Vertical wood grain on base;
- Height: 29".

Electrical management: use metal channels to fix electricity under the surface, melamine does not serve as a channel.

Options

Drill holes for Hutch

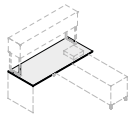

P

Cutout for Hutch

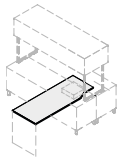

E

Specify hutch starting on p. 119

Modesty
3" Recessed

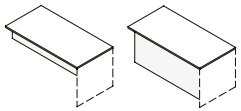

WAVC option not available with PM or FM modesty panels

PM $191 | FM $191

Leg Grommet

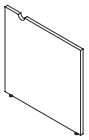

MGR $0

Grommet/Connectivity

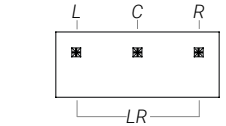

C_PF $28 ea.

MH3

A $434 | B/C $434 | D $434

Wireless Charger

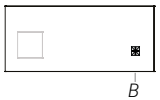

CQIBL $128 | CQIWH $128

Cutout for wires

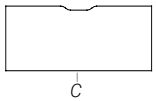

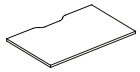

WAVC $28 ea.

How to Order

	A B		E P	B1 B3 PG DR	GRL GRC GRR GLR **NGR (std)**	PM FM	MGR R	WAVC **NWAV (std)**	MH3B MH3C MH3D	C L R LR	CQIBLB
LV		**FM**									
series	dimensions	product	hutch (Appx. H)	support (Appx. G)	grommet position	modesty (Appx. D)	leg grommet	cutout (Appx. B)	connectivity+position (Appx. B)		Qi (Appx. B)
Example **LV**	3060	**FM**	P	DR	GRL	PM	MGRR	NWAV	MH3BR		CQIBLB

Prices

Dimensions A	B
2460	729
2466	741
2472	754
2478	766
2484	779
3060	766
3066	779
3072	796
3078	813
3084	824
3660	804
3666	819
3672	838
3678	857
3684	872

Installed Desks

ex.: YI

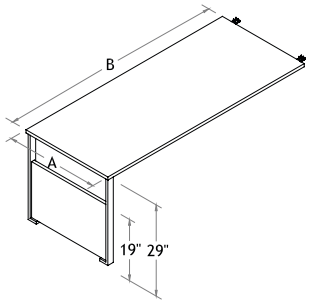

ex.: IY

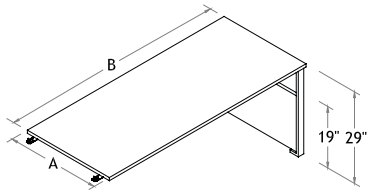

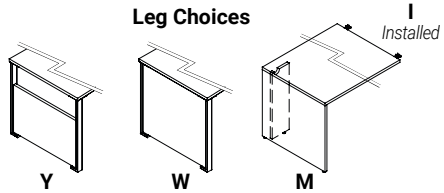

Manufacturing Standards

- Delivered disassembled;
- Support bar;
- Flush plates or mounting brackets according to specified option;
- Vertical wood grain on base;
- Height: 29";
- Y: chrome-finish metal legs with 1" laminate partial insert;
- W: chrome-finish metal legs with 1" laminate full insert;
- M: half leg on 1" laminate leg base.

Electrical management: use metal channels to fix electricity under the surface, melamine does not serve as a channel.

See Appendix A for the metal finishes available (no extra charge).

Options

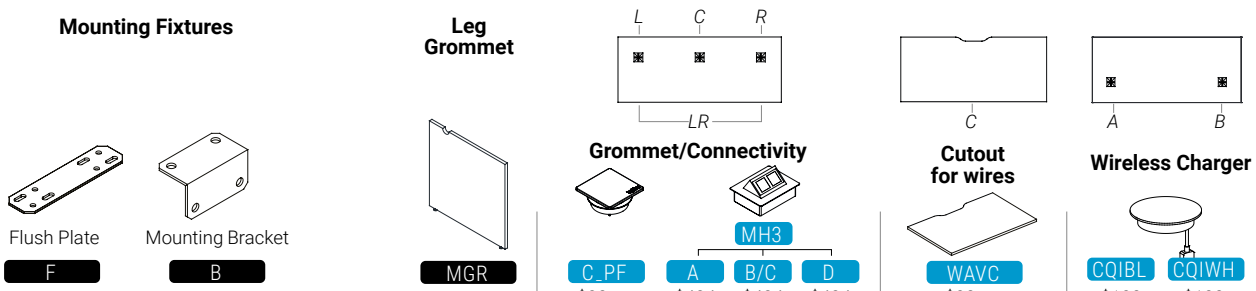

Prices

Dimensions A B	YI IY	WI IW	MI IM
2460	810	810	575
2466	823	823	591
2472	837	837	605
3060	848	848	614
3066	863	863	628
3072	881	881	645

How to Order

		A B	Y W M I	Y W M I	F B	WH BL SN **CHR (std)**	GRL GRC GRR GLR **NGR (std)**	MGR L MGR R	WAVC **NWAV (std)**	MH3B MH3C MH3D	C L R LR	CQIBLA CQIBLB
	LV											
	series	dimensions	leg on left	leg on right	mounting fixture	metal finish (Appx. A)	grommet position	leg grommet	cutout (Appx. B)	connectivity+position (Appx. B)		Qi (Appx. B)
Example	**LV**	3060	Y	I	F	CHR	GRL		NWAV	MH3BR		CQIBLB

Layering Installed Desks

FI

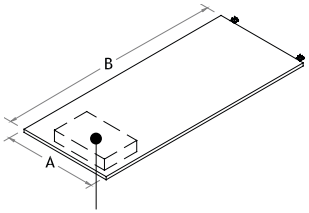

Choice of four supports:
B1, B3, PG and DR
(see Appendix G)

IF

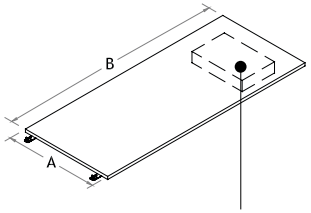

Choice of four supports:
B1, B3, PG and DR
(see Appendix G)

Manufacturing Standards

- Delivered disassembled;
- Support bar;
- Mounting plates and screws.

Electrical management: use metal channels to fix electricity under the surface, melamine does not serve as a channel.

Options

Mounting Fixtures

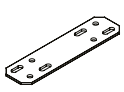

Flush Plate
F

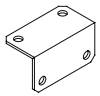

Mounting Bracket
B

Cutout for Shared Hutch

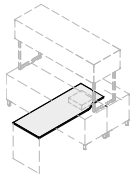

E
Specify hutch starting on p. 119

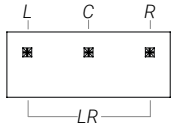

Grommet/Connectivity

C_PF
$28 ea.

MH3

A	B/C	D
$434	$434	$434

Wireless Charger

CQIBL	CQIWH
$128	$128

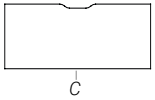

Cutout for wires

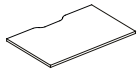

WAVC
$28 ea.

Prices

Dimensions A	B
2460	648
2466	664
2472	682
3060	683
3066	699
3072	721

How to Order

	A B	FI IF	F B	E	B1 B3 PG DR	GRL GRC GRR GLR **NGR (std)**	WAVC **NWAV (std)**	MH3B MH3C MH3D	C L R LR	CQIBLA CQIBLB
LV										
series	dimensions	product	mounting fixture	hutch (Appx. H)	support (Appx. G)	grommet position	cutout (Appx. B)	connectivity+position (Appx. B)		Qi (Appx. B)
Example **LV**	3060	FI	F	E	DR	GRL	NWAV	MH3BR		CQIBLB

Desks / Double and benching

Double Rectangular Desks

ex.: YSYS-YSYS

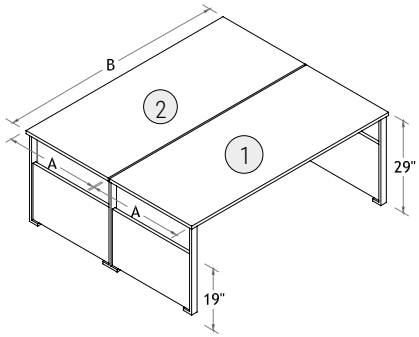

Leg Choices

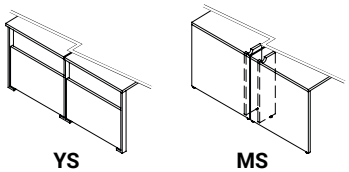

Manufacturing Standards

- Delivered disassembled;
- Support bar;
- Fixed clearance of 1/2" between the two work surfaces to pass cables;
- Vertical wood grain on base;
- Height: 29".
- **YS:** chrome-finish metal legs with 1" laminate partial insert;
- **MS:** half leg on 1" laminate shared leg base.

Electrical management: use metal channels to fix electricity under the surface, melamine does not serve as a channel.

See Appendix A for the metal finishes available (no extra charge).

Options

Drill holes for Shared Hutch

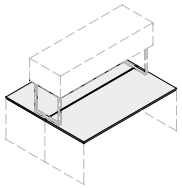

P

Specify hutch starting on p. 119

Leg Grommet

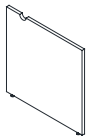

MGR

$0

Grommet/Connectivity

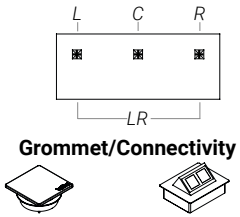

MH3

C_PF	A	B/C	D
$28 ea.	$434	$434	$434

Cutout for wires

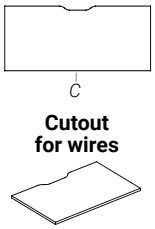

WAVC

$28 ea.

Wireless Charger

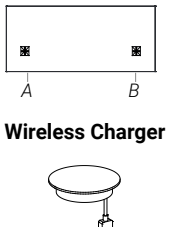

CQIBL	CQIWH
$128	$128

How to Order

		A B	YS MS	YS MS	P	WH BL SN **CHR (std)**	GRL GRC GRR GLR **NGR (std)**	MGR L MGR R MG LR	WAVC **NWAV (std)**	MH3B MH3C MH3D	C L R LR	CQIBLA CQIBLB
1	LV											
2	LV											
		series	dimensions	left leg	right leg	hutch (Appx. H)	metal finish (Appx. A)	grommet position	leg grommet	cutout (Appx. B)	connectivity+position (Appx. B)	Qi (Appx. B)
Example 1	LV		3060	YS	YS	P	CHR	GRL		NWAV	MH3BR	CQIBLA
Example 2	LV		3060	YS	YS	P	CHR	GRR		NWAV	MH3BL	CQIBLB

Prices

Price per individual desk

Dimensions A B	YSYS YSYS	YSMS MSYS	MSMS MSMS
2460	994	839	628
2466	1003	852	639
2472	1018	864	651
3060	1038	885	667
3066	1052	899	678
3072	1068	912	690

Price per double desk

Dimensions A B	YSYS YSYS	YSMS MSYS	MSMS MSMS
2460	1988	1678	1256
2466	2006	1704	1278
2472	2036	1728	1302
3060	2076	1770	1334
3066	2104	1798	1356
3072	2136	1824	1380

Double Layering Desks

ex.: YSF-FYS

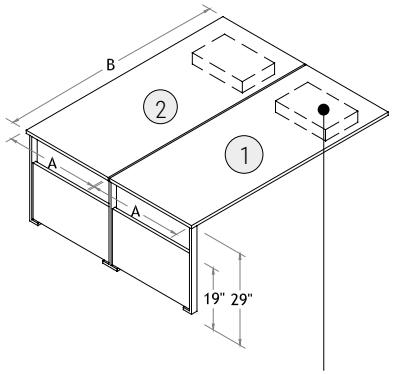

Choice of four supports:
B1, B3, PG and DR
(see Appendix G)

Leg Choices

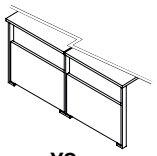

YS

Manufacturing Standards

- Delivered disassembled;
- Support bar;
- Chrome-finish metal legs with 1" laminate partial (Y) or full (W) insert;
- Fixed clearance of 1/2" between the two work surfaces to pass cables;
- Vertical wood grain on base;
- Height: 29";
- **YS:** chrome-finish metal legs with 1" laminate partial insert;

Electrical management: use metal channels to fix electricity under the surface, melamine does not serve as a channel.

See Appendix A for the metal finishes available (no extra charge).

Options

Drill holes for Shared Hutch

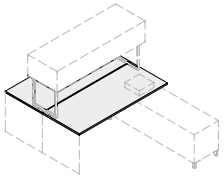

P

Cutout for Shared Hutch

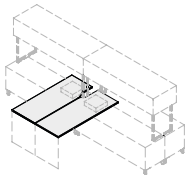

E

Specify hutch starting on p. 119

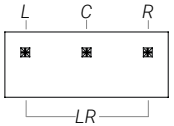

Grommet/Connectivity

MH3

C_PF	A	B/C	D
$28 ea.	$434	$434	$434

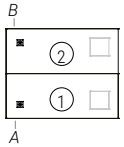

Wireless Charger

CQIBL	CQIWH
$128	$128

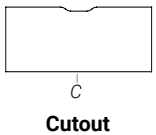

Cutout for wires

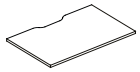

WAVC
$28 ea.

Prices

Price per individual desk

Dimensions A	B	Support (see Appendix G for further details)
2460		885
2466		894
2472		908
3060		925
3066		935
3072		953

Price per double desk

Dimensions A	B	Support (see Appendix G for further details)
2460		1770
2466		1788
2472		1816
3060		1850
3066		1870
3072		1906

How to Order

		A B	YS F	YS F	E P	WH BL SN **CHR (std)**	B1 B3 PG DR	GRL GRC GRR GLR **NGR (std)**	WAVC **NWAV (std)**	MH3B MH3C MH3D	C L R LR	CQIBLA CQIBLB
1	LV											
2	LV											

		series	dimensions	leg on left	leg on right	hutch (Appx. H)	metal finish (Appx. A)	support (Appx. G)	grommet position	cutout (Appx. B)	connectivity+position (Appx. B)	Qi (Appx. B)
Example	1	LV	3060	YS	F	E	CHR	DR	GRL	NWAV	MH3BR	CQIBLA
	2	LV	3060	F	YS	E	CHR	DR	GRR	NWAV	MH3BL	CQIBLB

Double Layering Desks

ex.: FYS-YSF

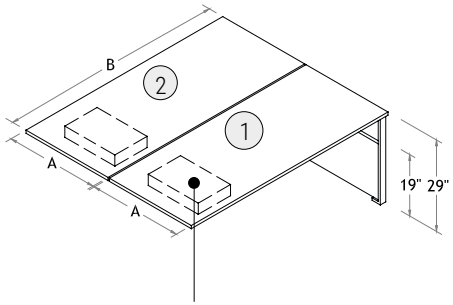

Choice of four supports:
B1, B3, PG and DR
(see Appendix G)

Leg Choices

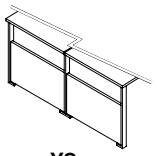

YS

Manufacturing Standards

- Delivered disassembled;
- Support bar;
- Chrome-finish metal legs with 1" laminate partial (Y) or full (W) insert;
- Fixed clearance of 1/2" between the two work surfaces to pass cables;
- Vertical wood grain on base;
- Height: 29";
- **YS:** chrome-finish metal legs with 1" laminate partial insert;

Electrical management: use metal channels to fix electricity under the surface, melamine does not serve as a channel.

See Appendix A for the metal finishes available (no extra charge).

Options

Drill holes for Shared Hutch

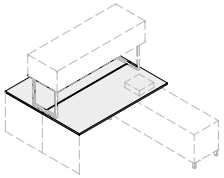

P

Cutout for Shared Hutch

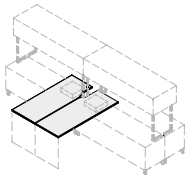

E

Specify hutch starting on p. 119

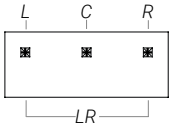

Grommet/Connectivity

C_PF
$28 ea.

MH3

A $434 | B/C $434 | D $434

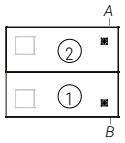

Wireless Charger

CQIBL $128 | CQIWH $128

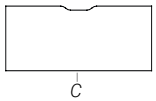

Cutout for wires

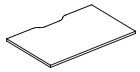

WAVC
$28 ea.

Prices

Price per individual desk

Dimensions A	B	Support (see Appendix G for further details)
2460		885
2466		894
2472		908
3060		925
3066		935
3072		953

Price per double desk

Dimensions A	B	Support (see Appendix G for further details)
2460		1770
2466		1788
2472		1816
3060		1850
3066		1870
3072		1906

How to Order

		A B	YS F	YS F	E P	WH BL SN **CHR (std)**	B1 B3 PG DR	GRL GRC GRR GLR **NGR (std)**	WAVC **NWAV (std)**	MH3B MH3C MH3D	C L R LR	CQIBLA CQIBLB
1	LV											
2	LV											

		series	dimensions	leg on left	leg on right	hutch (Appx. H)	metal finish (Appx. A)	support (Appx. G)	grommet position	cutout (Appx. B)	connectivity+position (Appx. B)	Qi (Appx. B)
Example	1	LV	3060	YS	F	E	CHR	DR	GRL	NWAV	MH3BR	CQIBLB
	2	LV	3060	F	YS	E	CHR	DR	GRR	NWAV	MH3BL	CQIBLA

Double Layering Desks

MSF-FMS

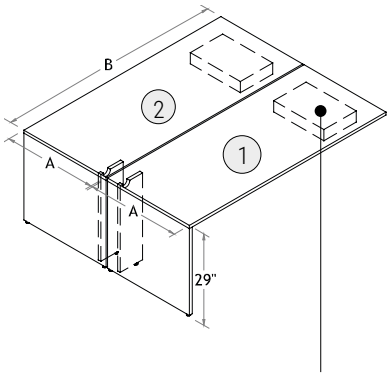

Choice of four supports:
B1, B3, PG and DR
(see Appendix G)

Manufacturing Standards

- Delivered disassembled;
- Support bar;
- Half leg on 1" laminate leg base;
- Fixed clearance of 1/2" between the two work surfaces to pass cables;
- Vertical wood grain on base;
- Height: 29".

Electrical management: use metal channels to fix electricity under the surface, melamine does not serve as a channel.

Options

Drill holes for Shared Hutch

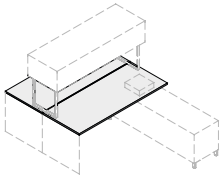

P

Cutout for Shared Hutch

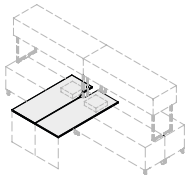

E

Specify hutch starting on p. 119

Leg Grommet

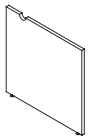

MGR
$0

Grommet/Connectivity

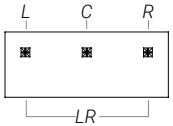

C_PF
$28 ea.

MH3

A $434 | B/C $434 | D $434

Wireless Charger

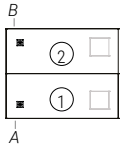

CQIBL $128 | CQIWH $128

Cutout for wires

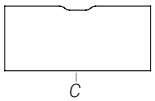

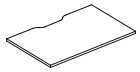

WAVC
$28 ea.

How to Order

		A B	F MS	F MS	E P	B1 B3 PG DR	GRL GRC GRR GLR **NGR (std)**	MGR L MGR R	WAVC **NWAV (std)**	MH3B MH3C MH3D	C L R LR	CQIBLA CQIBLB
1	**LV**											
2	**LV**											
	series	dimensions	leg on left	leg on right	hutch (Appx. H)	support (Appx. G)	grommet position	leg grommet	cutout (Appx. B)	connectivity+position (Appx. B)		Qi (Appx. B)
Example **1**	**LV**	3060	MS	F	E	DR	GRL	MGRL	NWAV	MH3BR		CQIBLA
2	**LV**	3060	F	MS	E	DR	GRR	MGRR	NWAV	MH3BL		CQIBLB

Prices

Price per individual desk

Dimensions A	B	Support (see Appendix G for further details)
2460		729
2466		741
2472		754
3060		766
3066		779
3072		796

Price per double desk

Dimensions A	B	Support (see Appendix G for further details)
2460		1458
2466		1482
2472		1508
3060		1532
3066		1558
3072		1592

Double Layering Desks

FMS-MSF

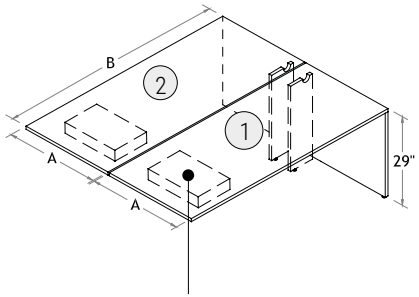

Choice of four supports:
B1, B3, PG and DR
(see Appendix G)

Manufacturing Standards

- Delivered disassembled;
- Support bar;
- Half leg on 1" laminate leg base;
- Fixed clearance of 1/2" between the two work surfaces to pass cables;
- Vertical wood grain on base;
- Height: 29".

Electrical management: use metal channels to fix electricity under the surface, melamine does not serve as a channel.

Options

Drill holes for Shared Hutch

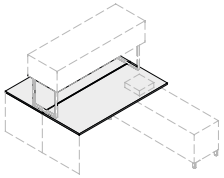

P

Cutout for Shared Hutch

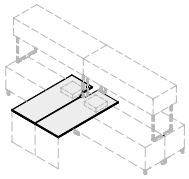

E

Specify hutch starting on p. 119

Leg Grommet

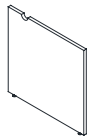

MGR
$0

Grommet/Connectivity

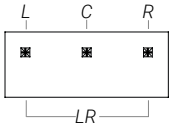

C_PF
$28 ea.

MH3

A $434
B/C $434
D $434

Wireless Charger

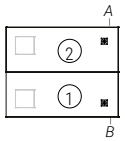

CQIBL $128
CQIWH $128

Cutout for wires

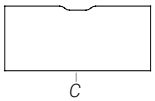

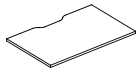

WAVC
$28 ea.

How to Order

		A B	F MS	F MS	E P	B1 B3 PG DR	GRL GRC GRR GLR **NGR (std)**	MGR L MGR R	WAVC **NWAV (std)**	MH3B MH3C MH3D	C L R LR	CQIBLA CQIBLB
1	**LV**											
2	**LV**											

		series	dimensions	leg on left	leg on right	hutch (Appx. H)	support (Appx. G)	grommet position	leg grommet	cutout (Appx. B)	connectivity+position (Appx. B)	Qi (Appx. B)
Example	**1**	**LV**	3060	F	MS	E	DR	GRL	MGRL	NWAV	MH3BR	CQIBLB
	2	**LV**	3060	MS	F	E	DR	GRR	MGRR	NWAV	MH3BL	CQIBLA

Prices

Price per individual desk

Dimensions A B	Support (see Appendix G for further details)
2460	729
2466	741
2472	754
3060	766
3066	779
3072	796

Price per double desk

Dimensions A B	Support (see Appendix G for further details)
2460	1458
2466	1482
2472	1508
3060	1532
3066	1558
3072	1592

Double Installed Desks

ex.: YSI-IYS

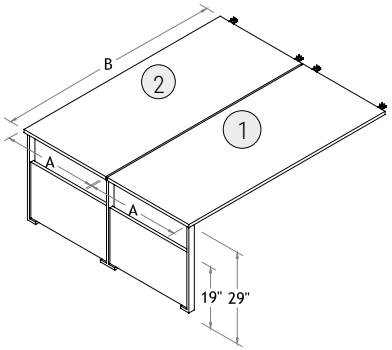

ex.: IYS-YSI

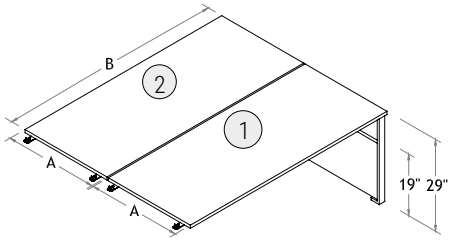

Leg Choices

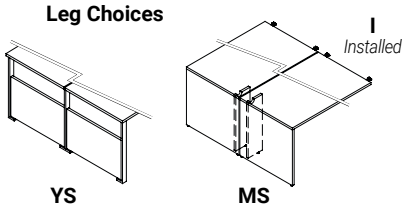

Manufacturing Standards

- Delivered disassembled;
- Support bar;
- Flush plates or mounting brackets according to specified option;
- Fixed clearance of 1/2" between the two work surfaces to pass cables;
- Vertical wood grain on base;
- Height: 29";
- **YS:** chrome-finish metal legs with 1" laminate partial insert;
- **MS:** half leg on 1" laminate shared leg base.

Electrical management: use metal channels to fix electricity under the surface, melamine does not serve as a channel.

See Appendix A for the metal finishes available (no extra charge).

Options

Mounting Fixtures

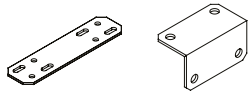

Flush Plate — F

Mounting Bracket — B

Leg Grommet

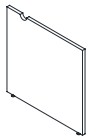

MGR $0

Grommet/Connectivity

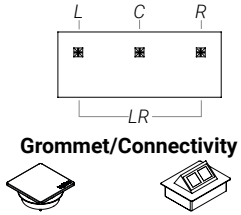

C_PF $28 ea. | A $434 | B/C $434 | D $434

Wireless Charger

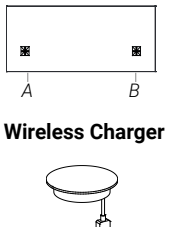

CQIBL $128 | CQIWH $128

Cutout for wires

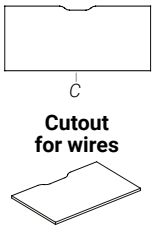

WAVC $28 ea.

How to Order

		A B	YS MS I	YS MS I	F B	WH BL SN **CHR (std)**	GRL GRC GRR GLR **NGR (std)**	MGR L MGR R	WAVC **NWAV (std)**	MH3B MH3C MH3D	C L R LR	CQIBLA CQIBLB
1	**LV**											
2	**LV**											
	series	dimensions	leg on left	leg on right	mounting fixture	metal finish (Appx. A)	grommet position	leg grommet	cutout (Appx. B)	connectivity+position (Appx. B)		Qi (Appx. B)
Example **1**	**LV**	3060	YS	I	F	CHR	GRL		NWAV	MH3BR		CQIBLA
2	**LV**	3060	I	YS	F	CHR	GRR		NWAV	MH3BL		CQIBLB

Prices

Price per individual desk

Dimensions A B	YSI IYS	MSI IMS
2460	667	575
2466	680	591
2472	691	605
3060	701	614
3066	714	628
3072	731	645

Price per double desk

Dimensions A B	YSI IYS	MSI IMS
2460	1334	1150
2466	1360	1182
2472	1382	1210
3060	1402	1228
3066	1428	1256
3072	1462	1290

Triple 120 Degree Desks

120DT

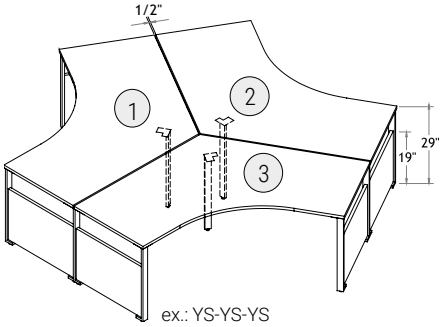

Shared Leg Choices

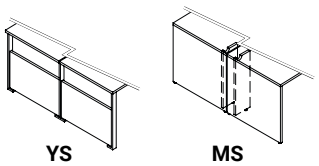

Manufacturing Standards

- Delivered disassembled;
- Support bar;
- Fixed clearance of 1/2" between the two work surfaces to pass cables;
- Central support leg;
- Vertical wood grain on base;
- Height: 29";
- YS: chrome-finish metal legs with 1" laminate partial insert;
- MS: half leg on 1" laminate leg base.

Electrical management: use metal channels to fix electricity under the surface, melamine does not serve as a channel.

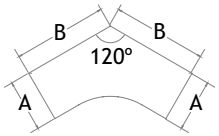

See Appendix A for the metal finishes available (no extra charge).

Options

Leg Grommet *(MS legs)*

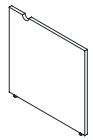

MGR $0

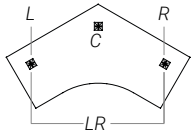

Grommet/Connectivity

C_PF $28 ea. | MH3: A $434, B/C $434, D $434

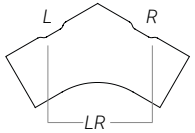

Cutout for wires

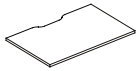

WAV $28 ea.

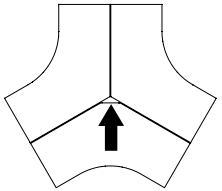

Column Cutout

CC $28

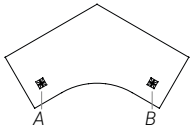

Wireless Charger

CQIBL $128 | CQIWH $128

Prices

Price per individual desk

Dimensions A B	YS-YS	MS-MS	YS-MS	MS-YS
2442	1593	1126	1360	1360
2448	1620	1155	1387	1387
2454	1648	1182	1417	1417
2460	1679	1212	1446	1446
3042	1753	1291	1521	1521
3048	1783	1317	1552	1552
3054	1812	1347	1577	1577
3060	1839	1377	1607	1607

Price per triple desk

Dimensions A B	YS-YS-YS	MS-MS-MS	YS-YS-MS	MS-MS-YS
2442	4779	3378	4312	3846
2448	4860	3465	4395	3929
2454	4944	3546	4478	4016
2460	5037	3636	4570	4104
3042	5259	3873	4797	4333
3048	5349	3951	4883	4421
3054	5436	4041	4971	4501
3060	5517	4131	5055	4591

How to Order

		A B		YS MS	YS MS	WH BL SN **CHR (std)**	GRL GRC GRR GLR **NGR (std)**	MGR L MGR R MG LR	WAVL WAVR WALR **NWAV (std)**	CC **NC (std)**	MH3B MH3C MH3D	C L R LR	CQIBLA CQIBLB
1	LV		120DT										
2	LV		120DT										
3	LV		120DT										

Example

	series	dimensions	code	left leg	right leg	metal finish (Appx. A)	grommet position	leg grommet	cutout (Appx. B)	column cutout	connectivity+position (Appx. B)	Qi (Appx. B)
1	LV	3060	120DT	YS	YS	CHR	GRL		NWAV	NC	MH3BR	CQIBLA
2	LV	3060	120DT	YS	YS	CHR	GRR		NWAV		MH3BL	CQIBLB
3	LV	3060	120DT	YS	YS	CHR	GRR		NWAV		MH3BL	CQIBLB

Shared Benching Workstation - 1-sided - 1 person

SB1Y

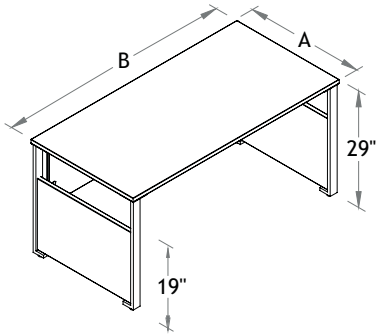

Manufacturing Standards

- Delivered disassembled;
- Workstation with 1 rectangular surface;
- Support bar;
- Modesty panel 15"H;
- Chrome finish metal legs with 19"H partial insert in 1" thick laminate;
- Vertical woodgrain on base;
- Height: 29".

Electrical management: use metal channels to fix electricity under the surface, melamine does not serve as a channel.

Metal finish: *If the metal finish is not specified, the standard is chrome (CHR).*

Screens: *For more privacy, screens can be added between and to the sides of worksurfaces, p.136.*

Options

Drill holes for Shared Hutch

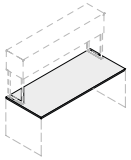

Specify hutch starting on p. 119

P
0$

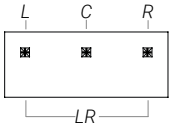

Grommet

C_PF
$28 ea.

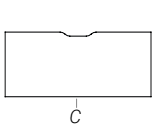

Cutout for wires

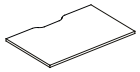

WAVC
$28 ea.

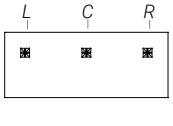

Connectivity

MH3_

Prices

Dimensions A	B
2448	1210
2454	1224
2460	1239
2466	1296
2472	1309
3048	1266
3054	1279
3060	1293
3066	1353
3072	1369

How to Order

		A B		WH BL SN **CHR (std)**	P	GRL GRC GRR GLR **NGR (std)**	WAVC **NWAV (std)**	MH3B MH3C MH3D	C L R
	LV		**SB1Y**						
	series	dimensions	code	metal finish (Appx. A)	hutch (Appx. H)	grommet position	cutout (Appx. B)	connectivity+position (Appx. B)	
Example	**LV**	2460	**SB1Y**	CHR	P	NGR	NWAV	MH3BR	

Shared Benching Workstation - 1-sided - 2 persons

SB2Y

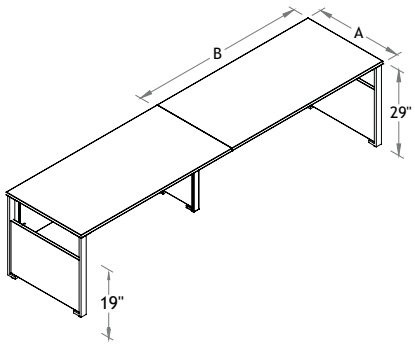

Manufacturing Standards

- Delivered disassembled;
- Workstation with 2 rectangular surfaces;
- Support bar;
- Modesty panel 15"H;
- Chrome finish metal legs with 19"H partial insert in 1" thick laminate;
- Recessed middle leg:
- 24" desk = in recess of 14-1/8";
- 30" desk = in recess of 10-3/4";
- Vertical wodgrain on base;
- Height: 29".

Electrical management: use metal channels to fix electricity under the surface, melamine does not serve as a channel.

Overall dimensions: *Width = ('B' x 2).*

Metal finish: *If the metal finish is not specified, the standard is chrome (CHR).*

Note: *The options chosen for one worksurface will apply to all worksurfaces.*

Screens: *For more privacy, screens can be added between and to the sides of worksurfaces, p.136.*

Options

Drill holes for Hutch

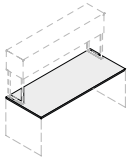

Specify hutch starting on p. 119

P

0$

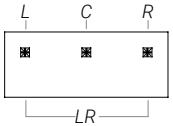

Grommet

C_PF

$28 ea.

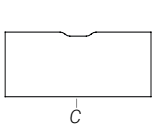

Cutout for wires

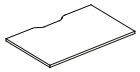

WAVC

$28 ea.

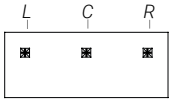

Connectivity

MH3_

Prices

Dimensions A	B
2448	2094
2454	2121
2460	2149
2466	2220
2472	2246
3048	2187
3054	2215
3060	2241
3066	2316
3072	2351

How to Order

		A B		WH BL SN **CHR (std)**	P	GRL GRC GRR GLR **NGR (std)**	WAVC **NWAV (std)**	MH3B MH3C MH3D	C L R
	LV		**SB2Y**						
	series	dimensions	code	metal finish (Appx. A)	hutch (Appx. H)	grommet position	cutout (Appx. B)	connectivity+position (Appx. B)	
Example	**LV**	2460	**SB2Y**	CHR	P	NGR	NWAV	MH3BR	

Shared Benching Workstation - 1-sided - 3 persons

SB3Y

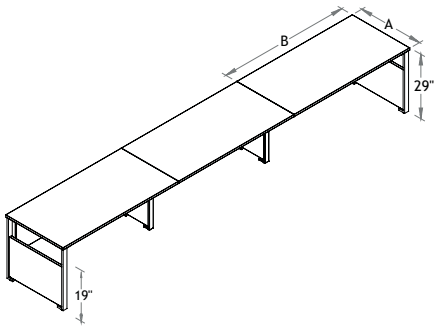

Manufacturing Standards

- Delivered disassembled
- Workstation with 3 rectangular surfaces;
- Support bars;
- Modesty panel 15"H;
- Chrome finish metal legs with 19"H partial insert in 1" thick laminate;
- Recessed middle legs:
- 24" desk = in recess of 14-1/8";
- 30" desk = in recess of 10-3/4";
- Vertical woodgrain on base;
- Height: 29".

Electrical management: use metal channels to fix electricity under the surface, melamine does not serve as a channel.

Overall dimensions: *Width = ('B' x 3).*

Metal finish: *If the metal finish is not specified, the standard is chrome (CHR)..*

Note: *The options chosen for one worksurface will apply to all worksurfaces.*

Screens: *For more privacy, screens can be added between and to the sides of worksurfaces, p.136.*

Options

Drill holes for Hutch

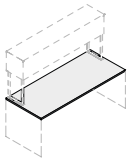

Specify hutch starting on p. 119

P

0$

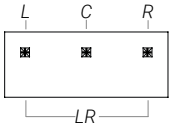

Grommet

C_PF

$28 ea.

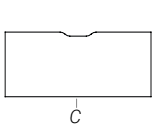

Cutout for wires

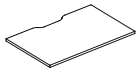

WAVC

$28 ea.

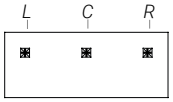

Connectivity

MH3_

Prices

Dimensions A	B
2448	2979
2454	3020
2460	3057
2466	3142
2472	3182
3048	3110
3054	3149
3060	3187
3066	3283
3072	3330

How to Order

		A B		WH BL SN **CHR (std)**	P	GRL GRC GRR GLR **NGR (std)**	WAVC **NWAV (std)**	MH3B MH3C MH3D	C L R
	LV		**SB3Y**						
	series	dimensions	code	métal finish (Appx. A)	hutch (Appx. H)	grommet position	cutout (Appx. B)	connectivity+position Appx. B)	
Exemple	**LV**	2460	**SB3Y**	CHR	P	NGR	NWAV	MH3BR	

Shared Benching Workstation - 1-sided - 4 persons

SB4Y

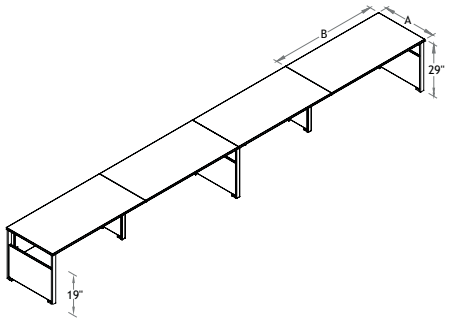

Manufacturing Standards

- Delivered disassembled
- Workstation with 4 rectangular surfaces;
- Support bars;
- Modesty panel 15"H;
- Chrome finish metal legs with 19"H partial insert in 1" thick laminate;
- Recessed middle legs:
- 24" desk = in recess of 14-1/8";
- 30" desk = in recess of 10-3/4";
- Vertical woodgrain on base;
- Height: 29".

Electrical management: use metal channels to fix electricity under the surface, melamine does not serve as a channel.

Overall dimensions: *Width = ('B' x 4).*

Metal finish: *If the metal finish is not specified, the standard is chrome (CHR)..*

Note: *The options chosen for one worksurface will apply to all worksurfaces.*

Screens: *For more privacy, screens can be added between and to the sides of worksurfaces, p.136.*

Options

Drill holes for Hutch

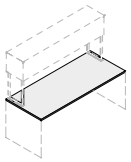

Specify hutch starting on p. 119

P

0$

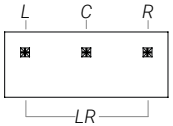

Grommet

C_PF

$28 ea.

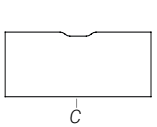

Cutout for wires

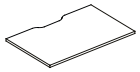

WAVC

$28 ea.

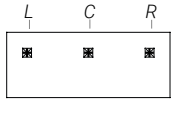

Connectivity

MH3_

Prices

Dimensions A	B
2448	3861
2454	3915
2460	3968
2466	4067
2472	4121
3048	4028
3054	4083
3060	4135
3066	4246
3072	4310

How to Order

		A B		WH BL SN **CHR (std)**	P	GRL GRC GRR GLR **NGR (std)**	WAVC **NWAV (std)**	MH3B MH3C MH3D	C L R
	LV		**SB4Y**						
	series	dimensions	code	metal finish (Appx. A)	hutch (Appx. H)	grommet position	cutout (Appx. B)	connectivity+position (Appx. B)	
Example	**LV**	2460	**SB4Y**	CHR	P	NGR	NWAV	MH3BR	

Shared Benching Workstation - 2-sided - 2 persons

DB2Y

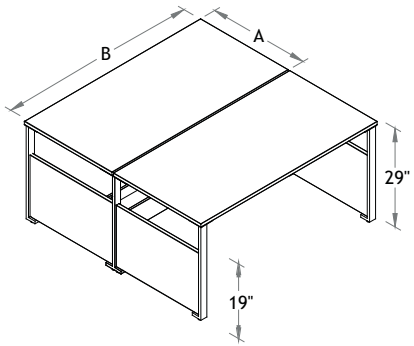

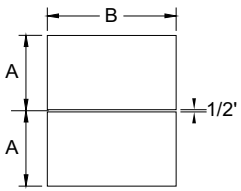

Manufacturing Standards

- Delivered disassembled
- Workstation with 2 rectangular surfaces;
- Support bars;
- Fixed clearance of 1/2" between the two work surfaces;
- Transverse structure in laminate;
- Chrome finish metal legs with 19"H partial insert in 1" thick laminate;
- Vertical woodgrain on base;
- Height: 29".

Electrical management: use metal channels to fix electricity under the surface, melamine does not serve as a channel.

Overall dimensions: *Depth = ('A' x 2).*

Metal finish: *If the metal finish is not specified, the standard is chrome (CHR)..*

Note: *The options chosen for one worksurface will apply to all worksurfaces.*

Screens: *For more privacy, screens can be added between and to the sides of worksurfaces, p.136.*

Options

Drill holes for hutch

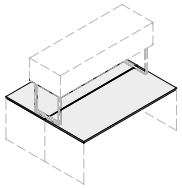

Specify hutch starting on p. 119

P

0$

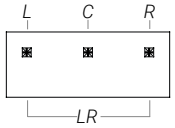

Grommet

C_PF

$28 ea.

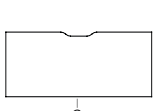

Cutout for wires

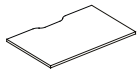

WAVC

$28 ea.

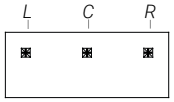

Connectivity

MH3_

Prices

Dimensions A	B
2448	2035
2454	2060
2460	2089
2466	2109
2472	2136
3048	2122
3054	2150
3060	2176
3066	2203
3072	2235

How to Order

		A B		WH BL SN **CHR (std)**	P	GRL GRC GRR GLR **NGR (std)**	WAVC **NWAV (std)**	MH3B MH3C MH3D	C L R
	LV		**DB2Y**						
	series	dimensions	code	metal finish (Appx. A)	hutch (Appx. H)	grommet position	cutout (Appx. B)	connectivity+position (Appx. B)	
Example	**LV**	2460	**DB2Y**	CHR	P	NGR	NWAV	MH3BR	

Shared Benching Workstation - 2-sided - 4 persons

DB4Y

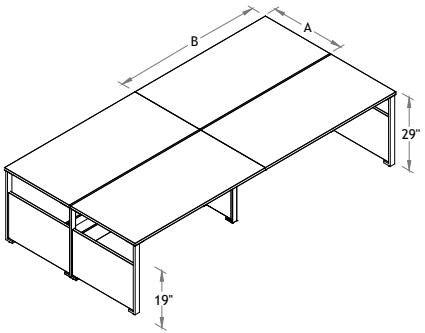

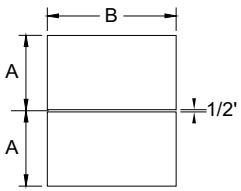

Manufacturing Standards

- Delivered disassembled
- Workstation with 4 rectangular surfaces;
- Support bars;
- Fixed clearance of 1/2" between the two work surfaces;
- Transverse structure in laminate;
- Chrome finish metal legs with 19"H partial insert in 1" thick laminate;
- Recessed middle legs:
- Vertical woodgrain on base;
- Height: 29".

Electrical management: use metal channels to fix electricity under the surface, melamine does not serve as a channel.

Depth = ('A' x 2). Width = ('B' x 2). If the metal finish is not specified, the standard is chrome (CHR)..

The options chosen for one worksurface will apply to all worksurfaces.

For more privacy, screens can be added between and to the sides of worksurfaces, p. <CM>216

Options

Drill holes for hutch

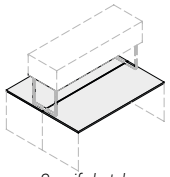

Specify hutch starting on p. 119

P

0$

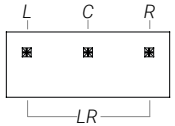

Grommet

C_PF

$28 ea.

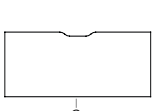

Cutout for wires

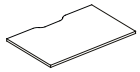

WAVC

$28 ea.

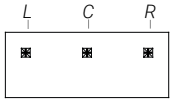

Connectivity

MH3_

Prices

Dimensions A	B
2448	3415
2454	3472
2460	3524
2466	3569
2472	3619
3048	3574
3054	3629
3060	3681
3066	3734
3072	3798

How to Order

		A B		WH BL SN **CHR (std)**	P	GRL GRC GRR GLR **NGR (std)**	WAVC **NWAV (std)**	MH3B MH3C MH3D	C L R
	LV		**DB4Y**						
	series	dimensions	code	metal finish (Appx. A)	hutch (Appx. H)	grommet position	cutout (Appx. B)	connectivity+position (Appx. B)	
Example	**LV**	2460	**DB4Y**	CHR	P	NGR	NWAV	MH3BR	

Shared Benching Workstation - 2-sided - 6 persons

DB6Y

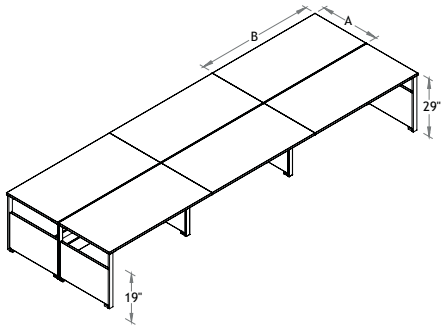

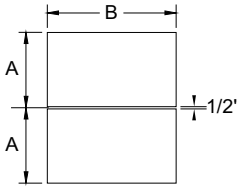

Manufacturing Standards

- Delivered disassembled
- Workstation with 6 rectangular surfaces;
- Support bars;
- Fixed clearance of 1/2" between the two work surfaces;
- Transverse structure in laminate;
- Chrome finish metal legs with 19"H partial insert in 1" thick laminate;
- Recessed middle legs:
- Vertical woodgrain on base;
- Height: 29".

Electrical management: use metal channels to fix electricity under the surface, melamine does not serve as a channel.

Depth = ('A' x 3). Width = ('B' x 3) If the metal finish is not specified,the standard is chrome (CHR)..

The options chosen for one worksurface will apply to all worksurfaces.

For more privacy, screens can be added between and to the sides of worksurfaces, p. <CM>216

Options

Drill holes for hutch

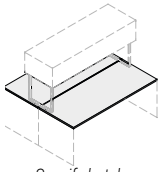

Specify hutch starting on p. 119

P

0$

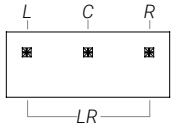

Grommet

C_PF

$28 ea.

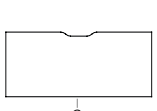

Cutout for wires

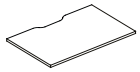

WAVC

$28 ea.

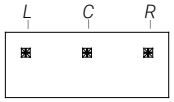

Connectivity

MH3_

Prices

Dimensions A	B
2448	4799
2454	4880
2460	4958
2466	5032
2472	5105
3048	5026
3054	5107
3060	5188
3066	5263
3072	5360

How to Order

		A B		WH BL SN **CHR (std)**	P	GRL GRC GRR GLR **NGR (std)**	WAVC **NWAV (std)**	MH3B MH3C MH3D	C L R
	LV		**DB6Y**						
	series	dimensions	code	metal finish (Appx. A)	hutch (Appx. H)	grommet position	cutout (Appx. B)	connectivity+position (Appx. B)	
Example	**LV**	2460	**DB6Y**	CHR	P	NGR	NWAV	MH3BR	

Shared Benching Workstation - 2-sided - 8 persons

DB8Y

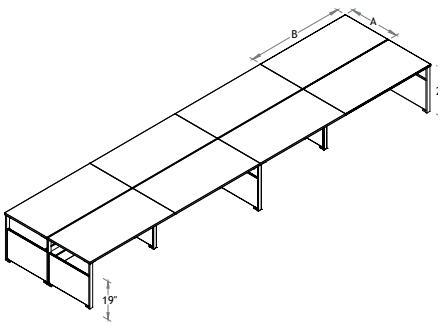

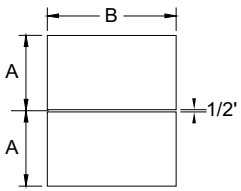

Manufacturing Standards

- Delivered disassembled
- Workstation with 8 rectangular surfaces;
- Support bars;
- Fixed clearance of 1/2" between the two work surfaces;
- Transverse structure in laminate;
- Chrome finish metal legs with 19"H partial insert in 1" thick laminate;
- Recessed middle legs:
- Vertical woodgrain on base;
- Height: 29".

Overall dimensions: *Depth = ('A' x 4). Width = ('B' x 4)*

Metal finish: *If the metal finish is not specified, the standard is chrome (CHR)..*

Note: *The options chosen for one worksurface will apply to all worksurfaces.*

Screens: *For more privacy, screens can be added between and to the sides of worksurfaces, p.136.*

Options

Drill holes for hutch

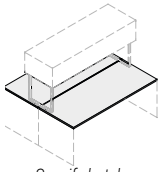

Specify hutch starting on p. 119

P

0$

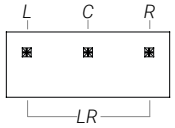

Grommet

C_PF

$28 ea.

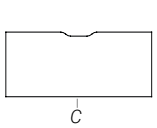

Cutout for wires

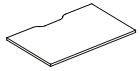

WAVC

$28 ea.

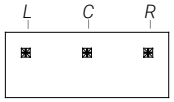

Connectivity

MH3_

Prices

Dimensions A	B
2448	6180
2454	6290
2460	6396
2466	6490
2472	6589
3048	6480
3054	6587
3060	6695
3066	6794
3072	6923

How to Order

		A B		WH BL SN **CHR (std)**	P	GRL GRC GRR GLR **NGR (std)**	WAVC **NWAV (std)**	MH3B MH3C MH3D	C L R
	LV		**DB8Y**						
	series	dimensions	code	metal finish (Appx. A)	hutch (Appx. H)	grommet position	cutout (Appx. B)	connectivity+position (Appx. B)	
Example	**LV**	2460	**DB8Y**	CHR	P	NGR	NWAV	MH3BR	

Secondary Desks

Returns

ex.: YR

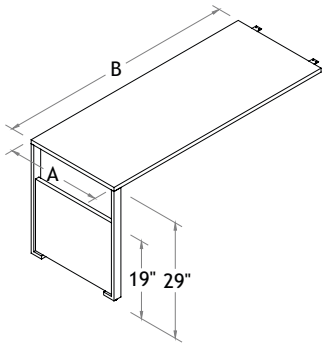

ex.: RY

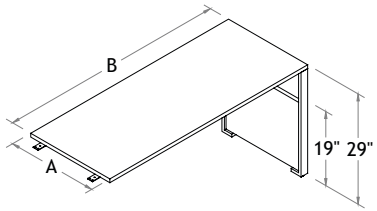

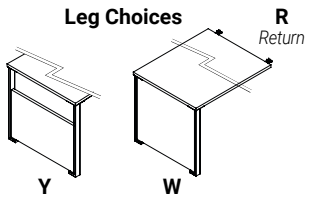

Manufacturing Standards

- Delivered disassembled;
- Chrome-finish metal legs with 1" laminate partial (Y) or full (W) insert;
- Support bar when 60" or longer;
- Mounting plates and screws;
- Vertical wood grain on leg base;
- Height: 29";
- **Y**: chrome-finish metal legs with 1" laminate partial insert;
- **W**: chrome-finish metal legs with 1" laminate full insert.

It is not recommended to place a freestanding hutch on a return if the hutch is the same length as the return.

See Appendix A for the metal finishes available (no extra charge).

Options

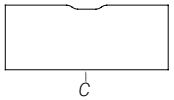

Cutout for wires

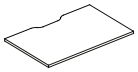

WAVC
$28 ea.

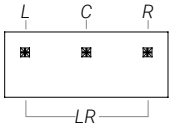

Grommet/Connectivity

MH3

C_PF $28 ea.
A $434
B/C $434
D $434

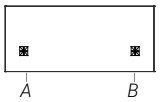

Wireless Charger

CQIBL $128
CQIWH $128

Prices

Dimensions A	B
1830	542
1836	549
1842	561
1848	567
1854	605
1860	691
1866	701
1872	712
2030	575
2036	587
2042	595
2048	605
2054	613
2060	743
2066	795
2072	806

The Wireless Charger is offered on 24" desks and wider

2430	593
2436	605
2442	614
2448	626
2454	636
2460	768
2466	819
2472	831

How to Order

		A B	Y W R	Y W R	WH BL SN **CHR (std)**	GRL GRC GRR GLR **NGR (std)**	WAVC **NWAV (std)**	MH3B MH3C MH3D	C L R LR	CQIBLA CQIBLB
	LV									
	series	dimensions	leg on left	leg on right	metal finish (Appx. A)	grommet position	cutout (Appx. B)	connectivity+position (Appx. B)		Qi (Appx. B)
Example	**LV**	2430	Y	R	CHR	GRC	NWAV	MH3BR		CQIBLA

Returns

MR

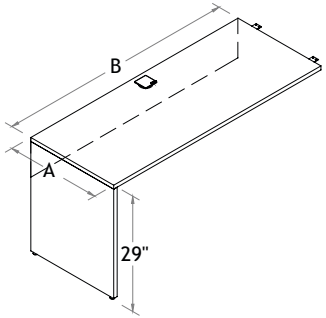

RM

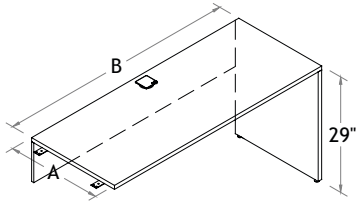

Manufacturing Standards

- Delivered disassembled;
- 1" laminate leg base;
- Centered CCPF grommet;
- Partial modesty panel (10") not recessed;
- Mounting plates and screws;
- Vertical wood grain on leg base;
- Height: 29".

It is not recommended to place a freestanding hutch on a return if the hutch is the same length as the return.

Options

Modesty

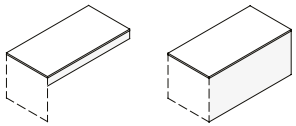

WAVC option not available with PM or FM modesty panels

PM	FM
$0	$0

Leg Grommet

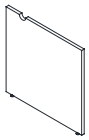

MGR
$0

Grommet/Connectivity

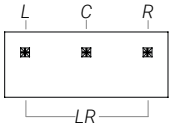

C_PF	MH3		
	A	B/C	D
$28 ea.	$434	$434	$434

Wireless Charger

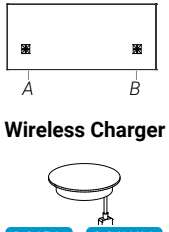

CQIBL	CQIWH
$128	$128

Prices

Dimensions A	B
1830	364
1836	380
1842	390
1848	402
1854	448
1860	459
1866	475
1872	484
2030	476
2036	497
2042	521
2048	542
2054	565
2060	575
2066	617
2072	619

The Wireless Charger is offered on 24" desks and wider

2430	530
2436	544
2442	561
2448	571
2454	589
2460	600
2466	642
2472	657

How to Order

		A B	R M	R M	NGR GRL GRR GLR **GRC (std)**	FM **PM (std)**	MGR L MGR R	MH3B MH3C MH3D	C L R LR	CQIBLA CQIBLB
	LV									
	series	dimensions	leg on left	leg on right	grommet position	modesty (Appx. D)	leg grommet	connectivity+position (Appx. B)		Qi (Appx. B)
Example	**LV**	2430	M	R	GRC	PM	MGRL	MH3BR		CQIBLA

Double Returns

ex.: YSR-RYS

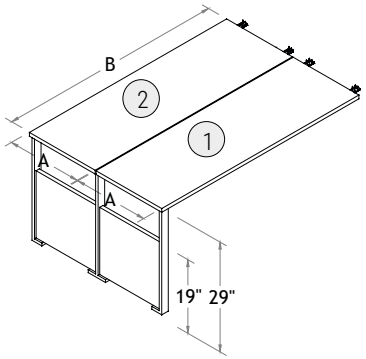

ex.: RYS-YSR

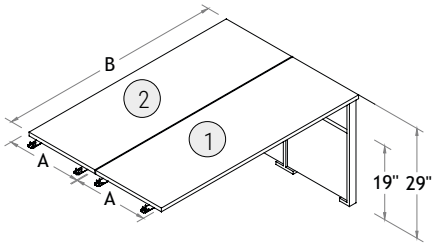

Leg Choices

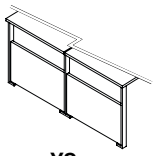

R
Return

YS

Manufacturing Standards

- Delivered disassembled;
- Chrome-finish metal legs with 1" laminate partial (Y) or full (W) insert;
- Support bar when 60" or longer;
- Mounting plates and screws;
- Vertical wood grain on leg base;
- Fixed clearance of 1/2" between the two work surfaces to pass cables;
- Height: 29";
- **YS:** chrome-finish metal legs with 1" laminate partial insert;

It is not recommended to place a freestanding hutch on a return if the hutch is the same length as the return.

See Appendix A for the metal finishes available (no extra charge).

Options

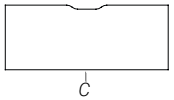

Cutout for wires

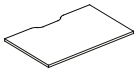

WAVC
$28 ea.

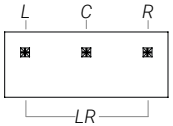

Grommet/Connectivity

C_PF
$28 ea.

MH3

A	B/C	D
$434	$434	$434

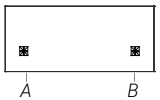

Wireless Charger

CQIBL	CQIWH
$128	$128

How to Order

		A B	YS R	YS R	WH BL SN **CHR (std)**	GRL GRC GRR GLR **NGR (std)**	WAVC **NWAV (std)**	MH3B MH3C MH3D	C L R LR	CQIBLA CQIBLB
1	**LV**									
2	**LV**									

		series	dimensions	leg on left	leg on right	metal finish (Appx. A)	grommet position	cutout (Appx. B)	connectivity+position (Appx. B)	Qi (Appx. B)
Example	**1**	**LV**	2460	YS	R	CHR	GRC	NWAV	MH3BR	CQIBLA
	2	**LV**	2460	R	YS	CHR	GRC	NWAV	MH3BL	CQIBLB

Prices

Dimensions A B	Price per individuel desk	Price per double desk
1830	491	982
1836	499	998
1842	505	1010
1848	514	1028
1854	549	1098
1860	642	1284
1866	652	1304
1872	662	1324
2030	499	998
2036	506	1012
2042	516	1032
2048	525	1050
2054	563	1126
2060	653	1306
2066	664	1328
2072	675	1350
The Wireless Charger is offered on 24" desks and wider		
2430	514	1028
2436	525	1050
2442	535	1070
2448	544	1088
2454	565	1130
2460	676	1352
2466	687	1374
2472	698	1396

Double Returns

MSR-RMS

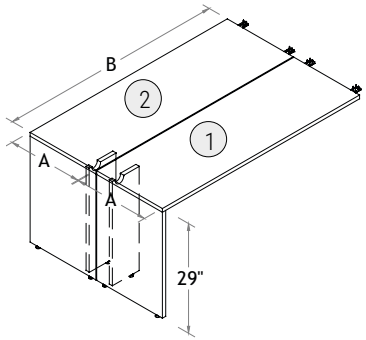

RMS-MSR

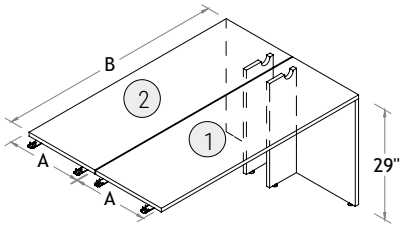

Manufacturing Standards

- Delivered disassembled;
- Support bar when 60" or longer;
- Half leg on 1" laminate leg base;
- Mounting plates and screws;
- Vertical wood grain on leg base;
- Fixed clearance of 1/2" between the two work surfaces to pass cables;
- Height: 29".

It is not recommended to place a freestanding hutch on a return if the hutch is the same length as the return.

Options

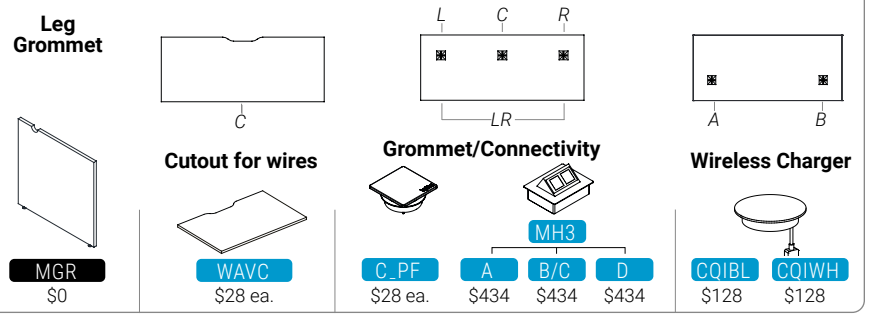

How to Order

		A B	R MS	R MS	GRL GRC GRR GLR **NGR (std)**	MGR L MGR R	WAVC **NWAV (std)**	MH3B MH3C MH3D	C L R LR	CQIBLA CQIBLB
1	LV									
2	LV									

Example		series	dimensions	leg on left	leg on right	grommet position	leg grommet	cutout (Appx. B)	connectivity+position (Appx. B)	Qi (Appx. B)
	1	LV	2460	MS	R	GRC	MGRL	NWAV	MH3BR	CQIBLA
	2	LV	2460	R	MS	GRC	MGRR	NWAV	MH3BL	CQIBLB

Prices

Dimensions A B	Price per individuel desk	Price per double desk
1830	338	676
1836	346	692
1842	353	706
1848	359	718
1854	398	796
1860	485	970
1866	496	992
1872	505	1010
2030	344	688
2036	353	706
2042	361	722
2048	366	732
2054	406	812
2060	499	998
2066	506	1012
2072	521	1042
The Wireless Charger is offered on 24" desks and wider		
2430	358	716
2436	366	732
2442	380	760
2448	388	776
2454	427	854
2460	521	1042
2466	531	1062
2472	544	1088

Bridges

BR

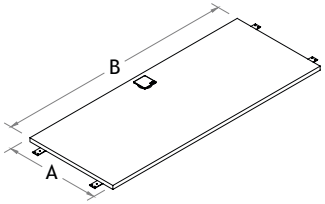

Manufacturing Standards

- Delivered disassembled;
- Centered CCPF grommet;
- Support bar when 60";
- Mounting plates and screws.

Options

Modesty

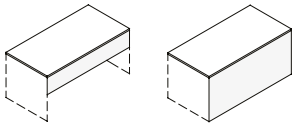

WAVC option not available with PM or FM modesty panels

PM $191 | FM $191

Cutout for wires

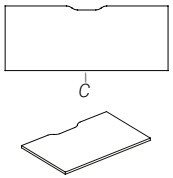

WAVC $28 ea.

Grommet/Connectivity

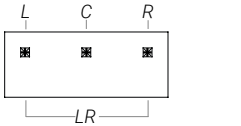

MH3

C_PF $28 ea. | A $434 | B/C $434 | D $434

Wireless Charger

CQIBL $128 | CQIWH $128

How to Order

	A B		NGR GRL GRR GLR **GRC (std)**	PM FM	WAVC NWAV (std)	MH3B MH3C MH3D	C L R LR	CQIBLA CQIBLB
LV		BR						
series	dimensions	product	grommet position	modesty (Appx. D)	cutout (Appx. B)	connectivity+position (Appx. B)		Qi (Appx. B)
Example LV	2430	BR	GRC	PM	NWAV	MH3BR		CQIBLA

Prices

Dimensions A	B
2030	166
2036	180
2042	194
2048	210
2054	224
2060	240
The Wireless Charger is offered on 24" desks and wider	
2430	166
2436	180
2442	194
2448	210
2454	224
2460	240

Floor Storage

Low Pedestals

BC19

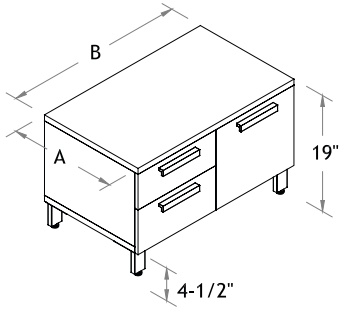

CB19

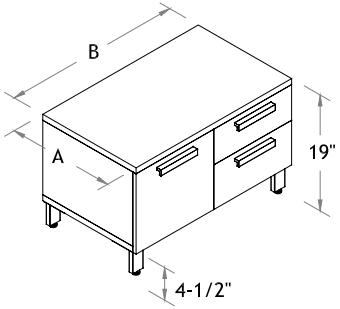

Manufacturing Standards

- 2 utility drawers;
- 1 file drawer for letter and legal formats;
- Chrome-finish H052 metal handle;
- Chrome-finish metal legs;
- Vertical wood grain on front;
- Height: 19".

COM Fabrics: *COM Fabrics are provided by the customer. For pricing please refer GR2 grade price.*

See Appendix A for the metal finishes available (no extra charge).

Specify if different handle desired (no extra charge, see p. 149).

Options

Lock

LK
$47 ea.

1-1/2"H Seat Cushion
See Appendix C for how to specify upholstery

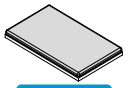

CF
Cushion Full

	GRA	GR1	GR2	GR3	GR4	GR5	GR6	GR7	GR8	GR9	GR10	GR11	GR12	leather
CF	$361	$373	$391	$409	$432	$453	$476	$499	$520	$543	$564	$610	$654	$618

Prices

Dimensions A B	Front finish (see Appendix A for further details) Std
1830	1201
1836	1224
2330	1249
2336	1279

How to Order

		A B	BC19 CB19	WH BL SN **CHR (std)**	CF	**H052 (std)**	LKBL LKSN
	LV						
	series	dimensions	product	metal finish (Appx. A)	cushion (Appx. C)	handle (p. 149)	lock (p. 154)
Example	**LV**	1836	BC19	CHR	CF	H052	LKSN

Low Pedestals

BBL19

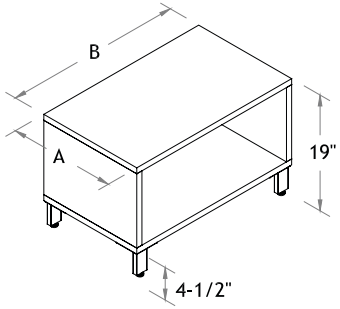

Manufacturing Standards

- Open storage;
- Chrome-finish metal legs;
- Height: 19".

COM Fabrics: *COM Fabrics are provided by the customer. For pricing please refer GR2 grade price.*

See Appendix A for the metal finishes available (no extra charge).

Options

Electrical Wire Management

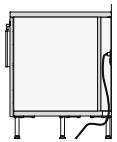

EM
$0

1-1/2"H Seat Cushion
See Appendix C for how to specify upholstery

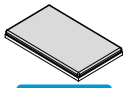

CF
Cushion Full

	GRA	GR1	GR2	GR3	GR4	GR5	GR6	GR7	GR8	GR9	GR10	GR11	GR12	leather
CF	$361	$373	$391	$409	$432	$453	$476	$499	$520	$543	$564	$610	$654	$618

Prices

Dimensions A B	Std
1830	642
1836	662
2330	674
2336	696

How to Order

	A B		EM	WH BL SN **CHR (std)**	CF
LV		**BBL19**			
series	dimensions	product	electricity (Appx. K)	metal finish (Appx. A)	cushion (Appx. C)
Example **LV**	1836	**BBL19**	EM	CHR	CF

Low Pedestals

AR19

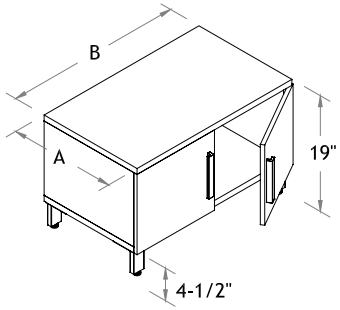

Manufacturing Standards

- Cabinet with 2 soft close doors;
- Chrome-finish H052 metal handle;
- Chrome-finish metal legs;
- Vertical wood grain on front;
- Height: 19".

COM Fabrics: *COM Fabrics are provided by the customer. For pricing please refer GR2 grade price.*

See Appendix A for the metal finishes available (no extra charge).

Specify if different handle desired (no extra charge, see p. 149).

Options

Lock

LK
$47 ea.

Electrical Wire Management

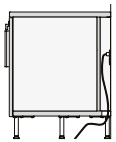

EM
$0

1-1/2"H Seat Cushion
See Appendix C for how to specify upholstery

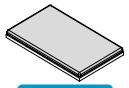

CF
Cushion Full

GRA	GR1	GR2	GR3	GR4	GR5	GR6	GR7	GR8	GR9	GR10	GR11	GR12	leather
$361	$373	$391	$409	$432	$453	$476	$499	$520	$543	$564	$610	$654	$618

Prices

Dimensions A B	Front finish (see Appendix A for further details) Std
1830	839
1836	863
2330	867
2336	899

How to Order

		A B		EM	WH BL SN **CHR (std)**	CF	**H052 (std)**	LKBL LKSN
	LV		**AR19**					
	series	dimensions	product	electricity (Appx. K)	metal finish (Appx. A)	cushion (Appx. C)	handle (p. 149)	lock (p. 154)
Example	**LV**	1836	**AR19**	EM	CHR	CF	H052	LKSN

Low Pedestals

CLO19

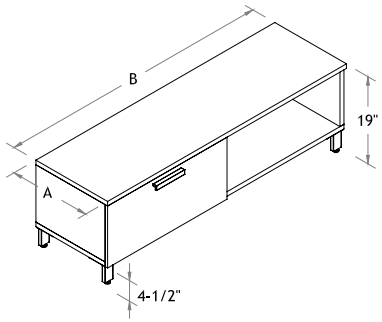

OCL19

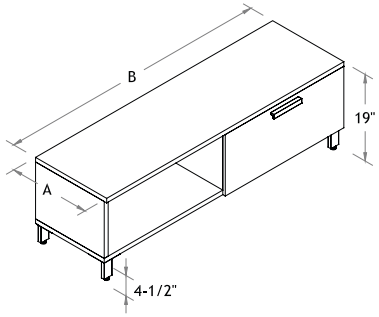

Manufacturing Standards

- 1 lateral file drawer for letter and legal formats;
- 1 open storage;
- Chrome-finish H052 metal handle;
- Chrome-finish metal legs;
- Vertical wood grain on front;
- Height: 19".

COM Fabrics: *COM Fabrics are provided by the customer. For pricing please refer GR2 grade price.*

See Appendix A for the metal finishes available (no extra charge).

Specify if different handle desired (no extra charge, see p. 149).

Options

Lock

LK
$47 ea.

Electrical Wire Management

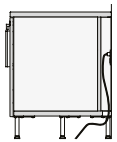

EM $0 | EH $38

1-1/2"H Seat Cushion

See Appendix C for how to specify upholstery

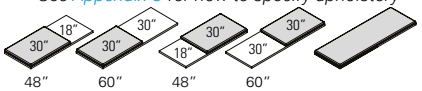

CL Cushion Left | CR Cushion Right | CF Cushion Full

	GRA	GR1	GR2	GR3	GR4	GR5	GR6	GR7	GR8	GR9	GR10	GR11	GR12	leather
CL	$361	$373	$391	$409	$432	$453	$476	$499	$520	$543	$564	$610	$654	$618
CR	$361	$373	$391	$409	$432	$453	$476	$499	$520	$543	$564	$610	$654	$618
CF	$419	$433	$451	$469	$491	$513	$536	$558	$580	$603	$624	$670	$714	$677

How to Order

		A B	CLO19 OCL19	EM EH	WH BL SN **CHR (std)**	CL CR CF	**H052 (std)**	LKBL LKSN
	LV							
	series	dimensions	product	electricity (Appx. K)	metal finish (Appx. A)	cushion (Appx. C)	handle (p. 149)	lock (p. 154)
Example	**LV**	2048	CLO19	EM	CHR	CL	H052	LKSN

Prices

Dimensions A B	Front finish (see Appendix A for further details) Std
2048	1126
2060	1167

Mobile Pedestals

MOBC

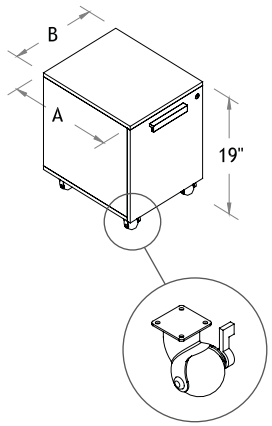

Manufacturing Standards

- Delivered with the casters disassembled;
- 1 file drawer;
- 5 casters with brake;
- Chrome-finish H052 metal handle;
- Lock;
- Vertical wood grain on front;
- Height: 19".

Dimension B:
LS: *Letter format (15-1/2")*
X: *Legal format (18-1/2")*

COM Fabrics: *COM Fabrics are provided by the customer. For pricing please refer GR2 grade price.*

Specify if different handle desired (no extra charge, see p. 149).

Options

1-1/2"H Seat Cushion
See Appendix C for how to specify upholstery

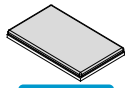

CF
Cushion Full

	GRA	GR1	GR2	GR3	GR4	GR5	GR6	GR7	GR8	GR9	GR10	GR11	GR12	leather
CF	$318	$327	$339	$350	$366	$381	$394	$410	$425	$440	$454	$484	$514	$489

Prices

Dimensions A B	Front finish (see Appendix A for further details) Std
18 LS	662
18 X	674
23 LS	682
23 X	695

How to Order

		A	LS X		CF	H052 (std)	LKBL LKSN
	LV			MOBC			
	series	dimensions	format	product	cushion (Appx. C)	handle (p. 149)	lock (p. 154)
Example	LV	18	LS	MOBC	CF	H052	LKSN

Mobile Pedestals

MOBD

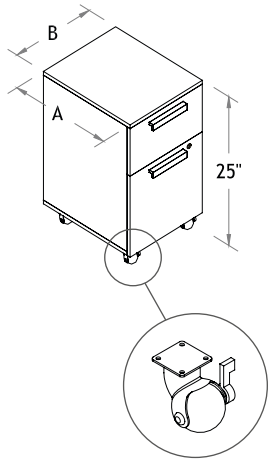

Manufacturing Standards

- Delivered with the casters disassembled;
- 1 utility drawer;
- 1 file drawer;
- 5 casters with brake;
- Chrome-finish H052 metal handle;
- Lock;
- Vertical wood grain on front;
- Height: 25".

Dimension B:
LS: *Letter format (15-1/2")*
X: *Legal format (18-1/2")*

COM Fabrics: *COM Fabrics are provided by the customer. For pricing please refer GR2 grade price.*

Specify if different handle desired (no extra charge, see p. 149).

Options

1-1/2"H Seat Cushion
See Appendix C for how to specify upholstery

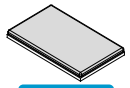

CF
Cushion Full

	GRA	GR1	GR2	GR3	GR4	GR5	GR6	GR7	GR8	GR9	GR10	GR11	GR12	leather
CF	$318	$327	$339	$350	$366	$381	$394	$410	$425	$440	$454	$484	$514	$489

Prices

Dimensions A B	Front finish (see Appendix A for further details) Std
18 LS	787
18 X	803
23 LS	815
23 X	829

How to Order

		A	LS X		CF	H052 (std)	LKBL LKSN
	LV			MOBD			
	series	dimensions	format	product	cushion (Appx. C)	handle (p. 149)	lock (p. 154)
Example	LV	18	LS	MOBD	CF	H052	LKSN

Sliding-Surface Pedestals

UN04L

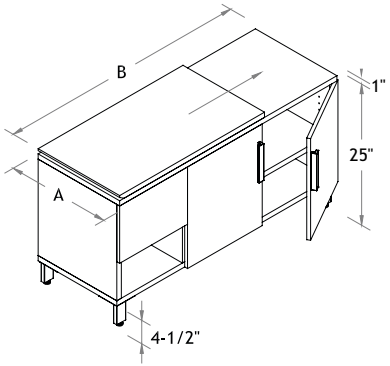

UN04R

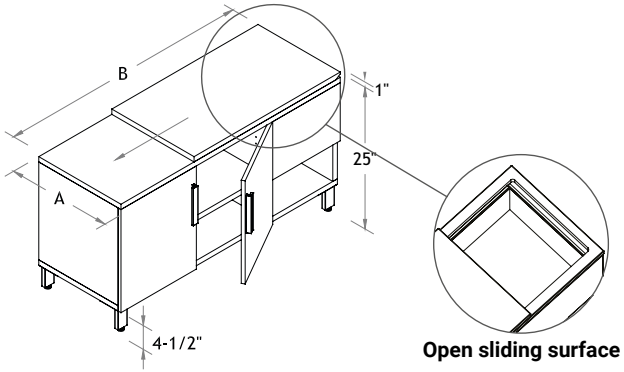

Open sliding surface

Fixed letter and legal-size storage

Manufacturing Standards

- Cabinet with 2 soft close doors;
- 1 adjustable shelf;
- 1 letter and legal-size file storage accessible from above with sliding surface;
- 1 open storage;
- Chrome-finish H052 metal handle;
- Chrome-finish metal legs;
- Vertical wood grain on front;
- Height: 26" (with sliding-surface).

See Appendix A for the metal finishes available (no extra charge).

Specify if different handle desired (no extra charge, see p. 149).

Options

Lock

LK
$47 ea.

Prices

Dimensions A B	Front finish (see Appendix A for further details) Std
1848	2153

How to Order

		A B	UN04L UN04R	WH BL SN **CHR (std)**	**H052 (std)**	LKBL LKSN
	LV					
	series	dimensions	product	metal finish (Appx. A)	handle (p. 149)	lock (p. 154)
Example	**LV**	1848	UN04L	CHR	H052	LKSN

High Pedestals

D25

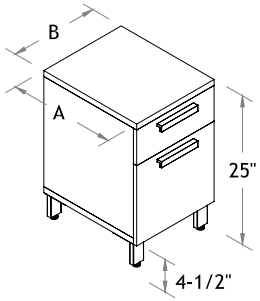

Manufacturing Standards

- 1 utility drawer;
- 1 file drawer;
- Chrome-finish H052 metal handle;
- Chrome-finish metal legs;
- Vertical wood grain on front;
- Height: 25".

LS: *Letter format*
X: *Legal format*

COM Fabrics: *COM Fabrics are provided by the customer. For pricing please refer GR2 grade price.*

See Appendix A for the metal finishes available (no extra charge).

Specify if different handle desired (no extra charge, see p. 149).

Options

Lock

LK
$47 ea.

1-1/2"H Seat Cushion
See Appendix C for how to specify upholstery

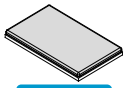

CF
Cushion Full

	GRA	GR1	GR2	GR3	GR4	GR5	GR6	GR7	GR8	GR9	GR10	GR11	GR12	leather
CF	$318	$327	$339	$350	$366	$381	$394	$410	$425	$440	$454	$484	$514	$489

Prices

Dimensions A B	Front finish (see Appendix A for further details) Std
18LS	794
18X	810
23LS	824
23X	840

How to Order

		A B		WH BL SN **CHR (std)**	CF	**H052 (std)**	LKBL LKSN
	LV		**D25**				
	series	dimensions	product	metal finish (Appx. A)	cushion (Appx. C)	handle (p. 149)	lock (p. 154)
Example	**LV**	18X	**D25**	CHR	CF	H052	LKSN

High Pedestals

K25

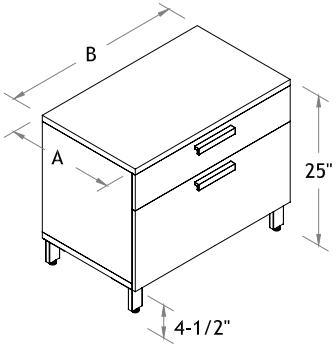

Manufacturing Standards

- 1 utility drawer with built-in divider;
- 1 lateral file drawer for letter and legal formats;
- Chrome-finish H052 metal handle;
- Chrome-finish metal legs;
- Vertical wood grain on front;
- Counterweight;
- Height: 25".

COM Fabrics: *COM Fabrics are provided by the customer. For pricing please refer GR2 grade price.*

See Appendix A for the metal finishes available (no extra charge).

Specify if different handle desired (no extra charge, see p. 149).

Options

Lock

LK
$47 ea.

1-1/2"H Seat Cushion
See Appendix C for how to specify upholstery

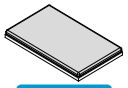

CF
Cushion Full

	GRA	GR1	GR2	GR3	GR4	GR5	GR6	GR7	GR8	GR9	GR10	GR11	GR12	leather
CF	$361	$373	$391	$409	$432	$453	$476	$499	$520	$543	$564	$610	$654	$618

Prices

Dimensions A B	Front finish (see Appendix A for further details) Std
1830	1097
1836	1126
2330	1123
2336	1159

How to Order

	A B		WH BL SN **CHR (std)**	CF	**H052 (std)**	LKBL LKSN
LV		**K25**				
series	dimensions	product	metal finish (Appx. A)	cushion (Appx. C)	handle (p. 149)	lock (p. 154)
Example **LV**	1836	**K25**	CHR	CF	H052	LKSN

High Pedestals

DO25

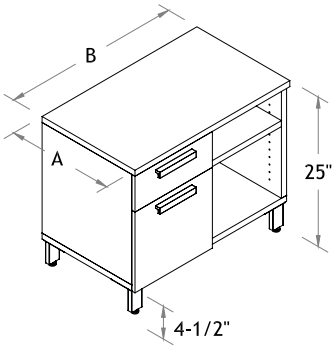

OD25

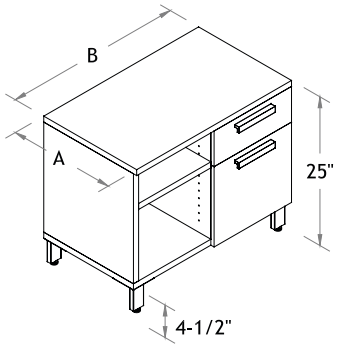

Manufacturing Standards

- 1 utility drawer;
- 1 file drawer for letter and legal formats;
- 1 open storage with 1 adjustable shelf;
- Chrome-finish H052 metal handle;
- Chrome-finish metal legs;
- Vertical wood grain on front;
- Height: 25".

COM Fabrics: *COM Fabrics are provided by the customer. For pricing please refer GR2 grade price.*

See Appendix A for the metal finishes available (no extra charge).

Specify if different handle desired (no extra charge, see p. 149).

Options

Lock

LK
$47 ea.

1-1/2"H Seat Cushion
See Appendix C for how to specify upholstery

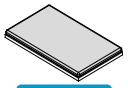

CF
Cushion Full

	GRA	GR1	GR2	GR3	GR4	GR5	GR6	GR7	GR8	GR9	GR10	GR11	GR12	leather
CF	$361	$373	$391	$409	$432	$453	$476	$499	$520	$543	$564	$610	$654	$618

Prices

Dimensions A B	Front finish (see Appendix A for further details) Std
1830	1147
1836	1179
2330	1205
2336	1242

How to Order

		A B	DO25 OD25	WH BL SN **CHR (std)**	CF	**H052 (std)**	LKBL LKSN
	LV						
	series	dimensions	product	metal finish (Appx. A)	cushion (Appx. C)	handle (p. 149)	lock (p. 154)
Example	**LV**	1836	DO25	CHR	CF	H052	LKSN

High Pedestals

BBL25

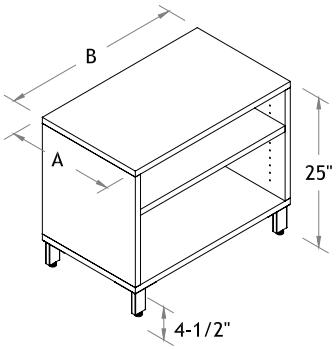

Manufacturing Standards

- Open storage with 1 adjustable shelf;
- Chrome-finish metal legs;
- Height: 25".

COM Fabrics: *COM Fabrics are provided by the customer. For pricing please refer GR2 grade price.*

See Appendix A for the metal finishes available (no extra charge).

Options

Electrical Wire Management

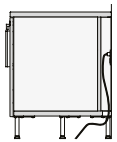

EM
$0

1-1/2"H Seat Cushion
See Appendix C for how to specify upholstery

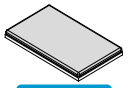

CF
Cushion Full

	GRA	GR1	GR2	GR3	GR4	GR5	GR6	GR7	GR8	GR9	GR10	GR11	GR12	leather
CF	$361	$373	$391	$409	$432	$453	$476	$499	$520	$543	$564	$610	$654	$618

Prices

Dimensions A	B
1824	634
1830	660
1836	683
2324	664
2330	691
2336	722

How to Order

		A B		EM	WH BL SN **CHR (std)**	CF
	LV		**BBL25**			
	series	dimensions	product	electricity (Appx. K)	metal finish (Appx. A)	cushion (Appx. C)
Example	**LV**	1836	**BBL25**	EM	CHR	CF

High Pedestals

AR25

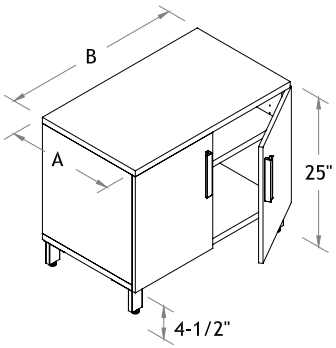

Manufacturing Standards

- Cabinet with 2 soft close doors;
- Chrome-finish H052 metal handle;
- Chrome-finish metal legs;
- Vertical wood grain on front;
- Height: 25".

COM Fabrics: *COM Fabrics are provided by the customer. For pricing please refer GR2 grade price.*

See Appendix A for the metal finishes available (no extra charge).

Specify if different handle desired (no extra charge, see p. 149).

Options

Lock

LK
$47 ea.

Electrical Wire Management

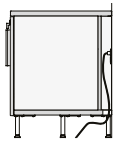

EM
$0

1-1/2"H Seat Cushion
See Appendix C for how to specify upholstery

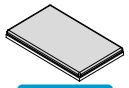

CF
Cushion Full

GRA	GR1	GR2	GR3	GR4	GR5	GR6	GR7	GR8	GR9	GR10	GR11	GR12	leather
$361	$373	$391	$409	$432	$453	$476	$499	$520	$543	$564	$610	$654	$618

Prices

Dimensions A B	Front finish (see Appendix A for further details) Std
1824	881
1830	912
1836	948
2324	913
2330	953
2336	993

How to Order

		A B		EM	WH BL SN **CHR (std)**	CF	**H052 (std)**	LKBL LKSN
	LV		**AR25**					
	series	dimensions	product	electricity (Appx. K)	metal finish (Appx. A)	cushion (Appx. C)	handle (p. 149)	lock (p. 154)
Example	**LV**	1836	**AR25**	EM	CHR	CF	H052	LKSN

High Pedestals

AR25 - Glass Doors

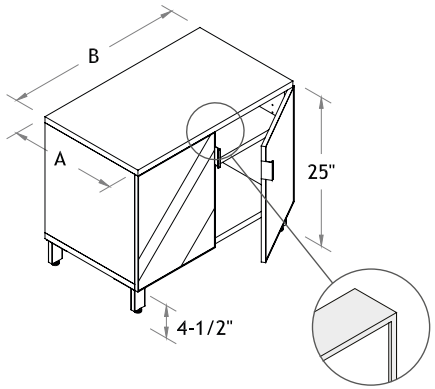

Aluminum frame detail

Manufacturing Standards

- Cabinet with 2 soft close doors;
- Frosted glass (VS) doors with aluminum-frame and built-in handle;
- 1 adjustable shelf;
- Chrome-finish metal legs;
- Height: 25".

COM Fabrics: *COM Fabrics are provided by the customer. For pricing please refer GR2 grade price.*

Color Glass: *If the choice of glass is not specified, the standard is frosted glass (VS). For other choices of glass, consult the Logiflex color chart.*

See Appendix A for the metal finishes available (no extra charge).

Options

Electrical Wire Management

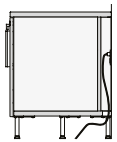

EM
$0

1-1/2"H Seat Cushion
See Appendix C for how to specify upholstery

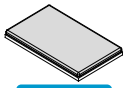

CF
Cushion Full

	GRA	GR1	GR2	GR3	GR4	GR5	GR6	GR7	GR8	GR9	GR10	GR11	GR12	leather
CF	$361	$373	$391	$409	$432	$453	$476	$499	$520	$543	$564	$610	$654	$618

Prices

Dimensions A	B	Door insert (see Appendix A for further details)
1824	1560	
1830	1675	
1836	1789	
2324	1598	
2330	1720	
2336	1840	

How to Order

		A B		EM	V4 PL **VS (std)**	WH BL SN **CHR (std)**	CF
	LV		**AR25**				
	series	dimensions	product	electricity (Appx. K)	insert (Appx. A)	metal finish (Appx. A)	cushion (Appx. C)
Example	**LV**	1836	**AR25**	EM	VS	CHR	CF

High Pedestals

KO25

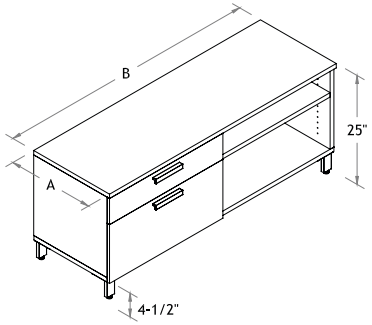

OK25

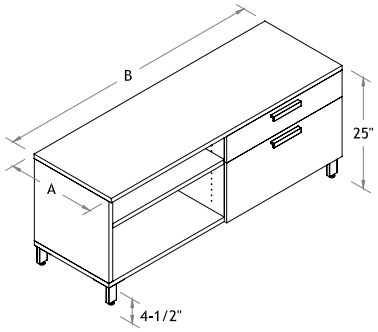

Manufacturing Standards

- 1 utility drawer with built-in divider;
- 1 lateral file drawer for letter and legal formats;
- 1 open storage with 1 adjustable shelf;
- Chrome-finish H052 metal handle;
- Chrome-finish metal legs;
- Vertical wood grain on front;
- Height: 25".

COM Fabrics: *COM Fabrics are provided by the customer. For pricing please refer GR2 grade price.*

See Appendix A for the metal finishes available (no extra charge).

Specify if different handle desired (no extra charge, see p. 149).

Electrical Wire Management: *When adding the EH and EC options, the shelf will be removed and the space converted to open storage.*

Options

Lock

LK
$47 ea.

Electrical Wire Management

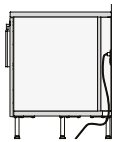

EM	EH	EC
$0	$38	$38

Drill holes for Shared Hutch

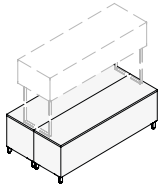

P

Specify hutch starting on p. 119

1-1/2"H Seat Cushion

See Appendix C for how to specify upholstery

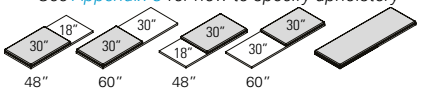

CL	CR	CF
Cushion Left	Cushion Right	Cushion Full

	GRA	GR1	GR2	GR3	GR4	GR5	GR6	GR7	GR8	GR9	GR10	GR11	GR12	leather
CL	$361	$373	$391	$409	$432	$453	$476	$499	$520	$543	$564	$610	$654	$618
CR	$361	$373	$391	$409	$432	$453	$476	$499	$520	$543	$564	$610	$654	$618
CF	$419	$433	$451	$469	$491	$513	$536	$558	$580	$603	$624	$670	$714	$677

How to Order

	series	A B dimensions	KO25 OK25 product	EM EH EC electricity (Appx. K)	P hutch (Appx. H)	WH BL SN **CHR (std)** metal finish (Appx. A)	CL CR CF cushion (Appx. C)	**H052 (std)** handle (p. 149)	LKBL LKSN lock (p. 154)
	LV								
Example	**LV**	2048	KO25	EM	P	CHR	CL	H052	LKSN

Prices

Dimensions A	B	Front finish (see Appendix A for further details) Std
2048		1164
2060		1216

High Pedestals

DARD

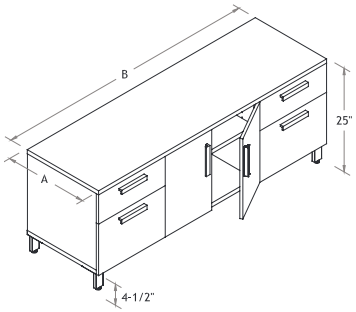

Manufacturing Standards

- Cabinet with 2 soft close doors;
- 1 adjustable shelf;
- 2 utility drawers;
- 2 file drawers for letter and legal formats;
- Chrome-finish H052 metal handle on drawer;
- Chrome-finish metal legs;
- Vertical wood grain on front;
- Height: 25".

COM Fabrics: *COM Fabrics are provided by the customer. For pricing please refer GR2 grade price.*

See Appendix A for the metal finishes available (no extra charge).

Specify if different handle desired (no extra charge, see p. 149).

Options

Lock

LK
$47 ea.

Electrical Wire Management

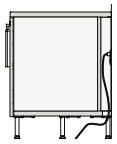

EM EH EC
$0 $38 $38

Drill holes for Shared Hutch

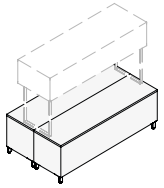

P
Specify hutch starting on p. 119

1-1/2"H Seat Cushion
See Appendix C for how to specify upholstery

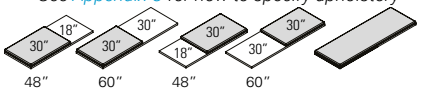

CL Cushion Left | CR Cushion Right | CF Cushion Full

	GRA	GR1	GR2	GR3	GR4	GR5	GR6	GR7	GR8	GR9	GR10	GR11	GR12	leather
CL	$361	$373	$391	$409	$432	$453	$476	$499	$520	$543	$564	$610	$654	$618
CR	$361	$373	$391	$409	$432	$453	$476	$499	$520	$543	$564	$610	$654	$618
CF	$419	$433	$451	$469	$491	$513	$536	$558	$580	$603	$624	$670	$714	$677

How to Order

		A B		EM EH EC	P	WH BL SN **CHR (std)**	**H052 (std)**	LKBL LKSN	CL CR CF
	LV		**DARD**						
	series	dimensions	product	electricity (Appx. K)	hutch (Appx. H)	metal finish (Appx. A)	handle (p. 149)	lock (p. 154)	cushion (Appx. C)
Example	**LV**	2060	**DARD**	EM	P	CHR	H052	LKSN	CL

Prices

Dimensions A B	Front finish (see Appendix A for further details) Std
2048	1604
2060	1745

High Pedestals

UN02SL

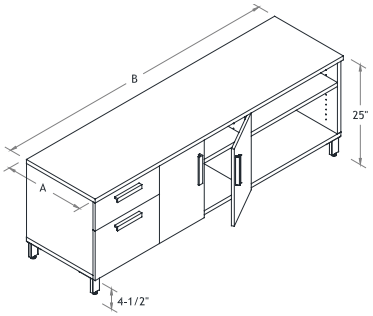

UN02SR

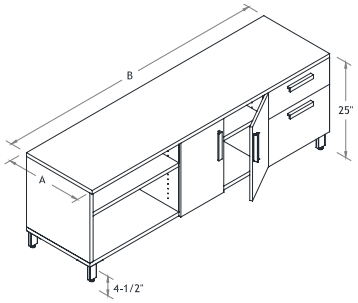

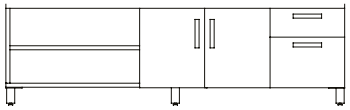

18,5" wide drawers and
minimum 26" wide open storage

Manufacturing Standards

- 1 open storage;
- Cabinet with 2 soft close doors;
- 2 adjustable shelves;
- 1 utility drawer;
- 1 file drawer for letter and legal formats;
- Chrome-finish H052 metal handle;
- 5 chrome-finish metal legs;
- Vertical wood grain on front;
- Height: 25".

COM Fabrics: *COM Fabrics are provided by the customer. For pricing please refer GR2 grade price.*

**Hutch available only on the 72" long high pedestal.*

See Appendix A for the metal finishes available (no extra charge).

Specify if different handle desired (no extra charge, see p. 149).

Electrical Wire Management: *When adding the EH and EC options, the shelf will be removed and the space converted to open storage.*

Options

Lock

LK
$47 ea.

Electrical Wire Management

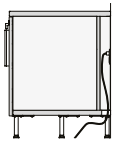

EM	EH	EC
$0	$38	$38

Drill holes for Shared Hutch

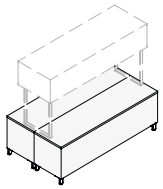

P
Specify hutch starting on p. 119

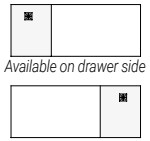
Available on drawer side

Wireless Charger

CQIBL	CQIWH
$128	$128

1-1/2"H Seat Cushion
See Appendix C for how to specify upholstery

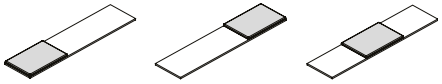

CL Cushion Left | CR Cushion Right | CC Cushion Centered

	GRA	GR1	GR2	GR3	GR4	GR5	GR6	GR7	GR8	GR9	GR10	GR11	GR12	leather
CL	$361	$373	$391	$409	$432	$453	$476	$499	$520	$543	$564	$610	$654	$618
CR	$361	$373	$391	$409	$432	$453	$476	$499	$520	$543	$564	$610	$654	$618
CC	$361	$373	$391	$409	$432	$453	$476	$499	$520	$543	$564	$610	$654	$618

How to Order

		A B	UN02SL UN02SR	EM EH EC	P	WH BL SN **CHR (std)**	CL CR CC	QIBL	**H052 (std)**	LKBL LKSN
	LV									
	series	dimensions	product	electricity (Appx. K)	hutch (Appx. H)	metal finish (Appx. A)	cushion (Appx. C)	Qi (Appx. B)	handle (p. 149)	lock (p. 154)
Example	**LV**	2072	UN02SL	EM	P	CHR	CL	QIBL	H052	LKSN

Prices

Dimensions A B	Front finish (see Appendix A for further details) Std
*2072	1574
2084	1625

High Pedestals

UN02L

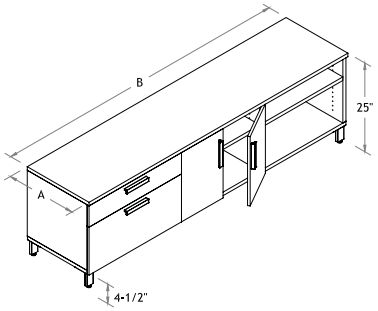

UN02R

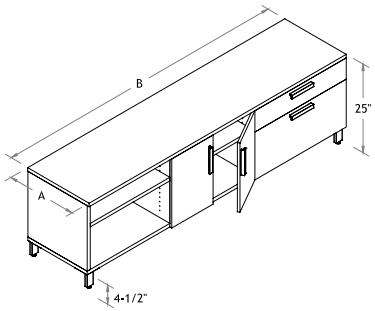

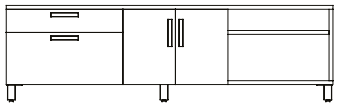

30" width drawer, equal width cabinet and open storage

Manufacturing Standards

- 1 open storage;
- Cabinet with 2 soft close doors;
- 2 adjustable shelves;
- 1 utility drawer;
- 1 lateral file drawer for letter and legal formats;
- Chrome-finish H052 metal handle;
- 5 chrome-finish metal legs;
- Vertical wood grain on front;
- Height: 25".

COM Fabrics: *COM Fabrics are provided by the customer. For pricing please refer GR2 grade price.*

**Hutch available only on the 72" long high pedestal.*

See Appendix A for the metal finishes available (no extra charge).

Specify if different handle desired (no extra charge, see p. 149).

Electrical Wire Management: *When adding the EH and EC options, the shelf will be removed and the space converted to open storage.*

Options

Lock

LK
$47 ea.

Electrical Wire Management

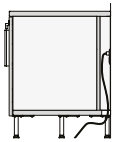

EM	EH	EC
$0	$38	$38

Drill holes for Shared Hutch

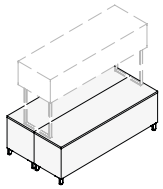

P
Specify hutch starting on p. 119

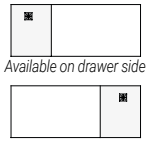
Available on drawer side

Wireless Charger

CQIBL	CQIWH
$128	$128

1-1/2"H Seat Cushion
See Appendix C for how to specify upholstery

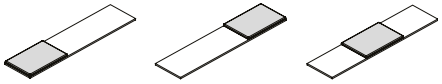

CL Cushion Left | CR Cushion Right | CC Cushion Centered

	GRA	GR1	GR2	GR3	GR4	GR5	GR6	GR7	GR8	GR9	GR10	GR11	GR12	leather
CL	$361	$373	$391	$409	$432	$453	$476	$499	$520	$543	$564	$610	$654	$618
CR	$361	$373	$391	$409	$432	$453	$476	$499	$520	$543	$564	$610	$654	$618
CC	$361	$373	$391	$409	$432	$453	$476	$499	$520	$543	$564	$610	$654	$618

How to Order

		A B	UN02L UN02R	EM EH EC	P	WH BL SN **CHR (std)**	CL CR CC	QIBL	**H052 (std)**	LKBL LKSN
	LV									
	series	dimensions	product	electricity (Appx. K)	hutch (Appx. H)	metal finish (Appx. A)	cushion (Appx. C)	Qi (Appx. B)	handle (p. 149)	lock (p. 154)
Example	**LV**	2072	UN02L	EM	P	CHR	CL	QIBL	H052	LKSN

Prices

Dimensions A B	Front finish (see Appendix A for further details) Std
*2072	1590
2084	1648

Shared High Pedestals

DD25L

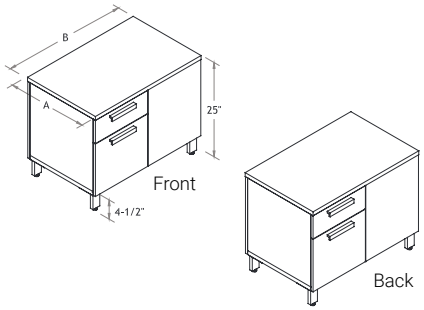

Space inside

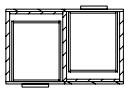

DD25R

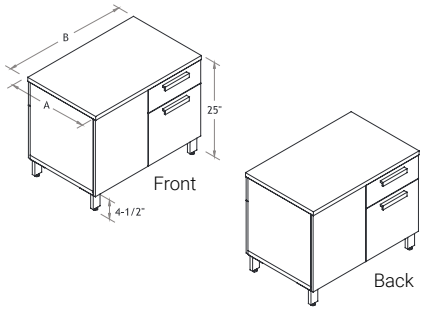

Space inside

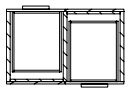

Manufacturing Standards

- 1 utility drawer on each side;
- 1 file drawer on each side for letter and legal formats;
- Chrome-finish H052 metal handle;
- Chrome-finish metal legs;
- Vertical wood grain on front;
- Height: 25".

LS: *Letter format (total length: 31-3/16")*
X: *Legal format (total length: 37-3/16")*

COM Fabrics: *COM Fabrics are provided by the customer. For pricing please refer GR2 grade price.*

See Appendix A for the metal finishes available (no extra charge).

Specify if different handle desired (no extra charge, see p. 149).

Options

Lock

LK
$47 ea.

1-1/2"H Seat Cushion
See Appendix C for how to specify upholstery

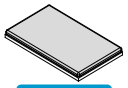

CF
Cushion Full

	GRA	GR1	GR2	GR3	GR4	GR5	GR6	GR7	GR8	GR9	GR10	GR11	GR12	leather
CF	$361	$373	$391	$409	$432	$453	$476	$499	$520	$543	$564	$610	$654	$618

Prices

Dimensions A B	Front finish (see Appendix A for further details) Std
20 LS	1712
20 X	1763

How to Order

		A B	DD25L DD25R	WH BL SN **CHR (std)**	CF	**H052 (std)**	LKBL LKSN
	LV						
	series	dimensions	product	metal finish (Appx. A)	cushion (Appx. C)	handle (p. 149)	lock (p. 154)
Example	**LV**	20LS	DD25L	CHR	CF	H052	LKSN

Shared High Pedestals

KD25L

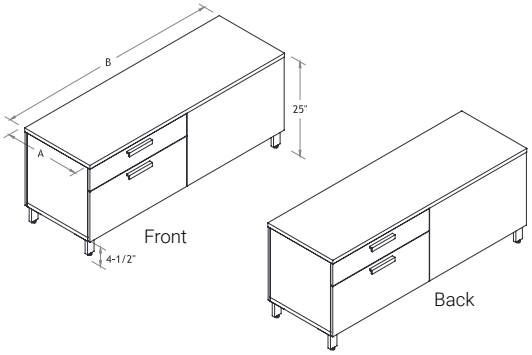

Space inside

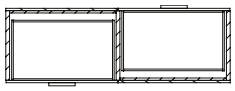

KD25R

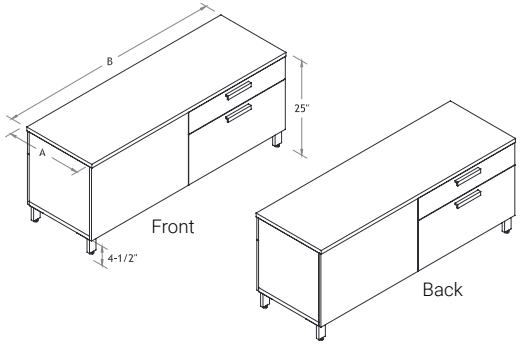

Space inside

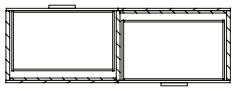

Manufacturing Standards

- 1 utility drawer on each side with built-in divider;
- 1 lateral file drawer on each side for letter and legal formats;
- Chrome-finish H052 metal handle;
- Chrome-finish metal legs;
- Vertical wood grain on front;
- Counterweight;
- Height: 25".

See Appendix A for the metal finishes available (no extra charge).

COM Fabrics: *COM Fabrics are provided by the customer. For pricing please refer GR2 grade price.*

Cushions: *Seat cushions are ordered from the front view of the furniture. ie: a left cushion will be on the left side on the front but on the right side on the back.*

Specify if different handle desired (no extra charge, see p. 149).

Options

Lock

LK
$47 ea.

1-1/2"H Seat Cushion
See Appendix C for how to specify upholstery

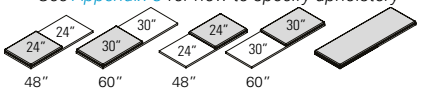

CL Cushion Left | CR Cushion Right | CF Cushion Full

	GRA	GR1	GR2	GR3	GR4	GR5	GR6	GR7	GR8	GR9	GR10	GR11	GR12	leather
CL	$361	$373	$391	$409	$432	$453	$476	$499	$520	$543	$564	$610	$654	$618
CR	$361	$373	$391	$409	$432	$453	$476	$499	$520	$543	$564	$610	$654	$618
CF	$419	$433	$451	$469	$491	$513	$536	$558	$580	$603	$624	$670	$714	$677

How to Order

		A B	KD25L KD25R	WH BL SN **CHR (std)**	CL CR CF	**H052 (std)**	LKBL LKSN
	LV						
	series	dimensions	product	metal finish (Appx. A)	cushion (Appx. C)	handle (p. 149)	lock (p. 154)
Example	**LV**	2060	KD25L	CHR	CF	H052	LKSN

Prices

Dimensions A B	Front finish (see Appendix A for further details) Std
2048	1933
2060	1978

Shared High Pedestals

KOD25

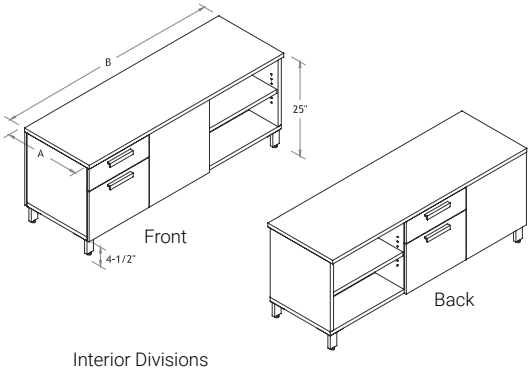

Interior Divisions

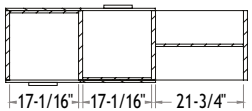

OKD25

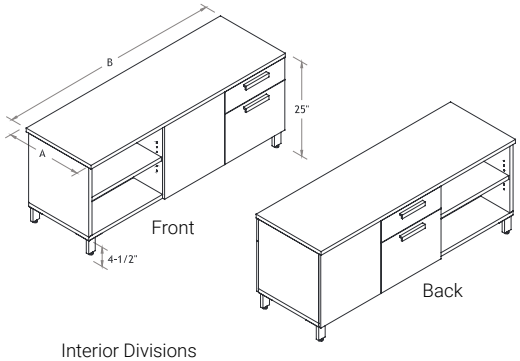

Interior Divisions

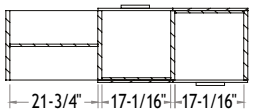

Manufacturing Standards

- 1 utility drawer on each side with built-in divider;
- 1 lateral file drawer on each side for letter and legal formats;
- 1 open storage on each side with 1 adjustable shelf;
- Chrome-finish H052 metal handle;
- Chrome-finish metal legs;
- Vertical wood grain on front;
- Height: 25".

COM Fabrics: *COM Fabrics are provided by the customer. For pricing please refer GR2 grade price.*

Not compatible with floating desks.

See Appendix A for the metal finishes available (no extra charge).

Specify if different handle desired (no extra charge, see p. 149).

Options

Lock

LK
$47 ea.

1-1/2"H Seat Cushion
See Appendix C for how to specify upholstery

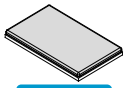

CF
Cushion Full

	GRA	GR1	GR2	GR3	GR4	GR5	GR6	GR7	GR8	GR9	GR10	GR11	GR12	leather
CF	$419	$433	$451	$469	$491	$513	$536	$558	$580	$603	$624	$670	$714	$677

Prices

Dimensions A B	Front finish (see Appendix A for further details) Std
2060	1845

How to Order

		A B	KOD25 OKD25	WH BL SN **CHR (std)**	CF	**H052 (std)**	LKBL LKSN
	LV						
	series	dimensions	product	metal finish (Appx. A)	cushion (Appx. C)	handle (p. 149)	lock (p. 154)
Example	**LV**	2060	KOD25	CHR	CF	H052	LKSN

Credenzas

AR3L

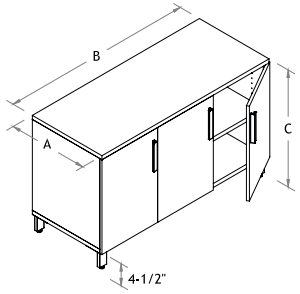

AR3R

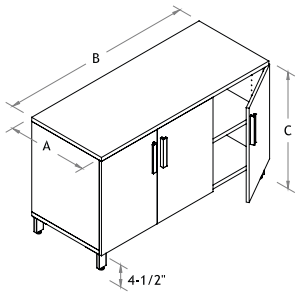

ARAR

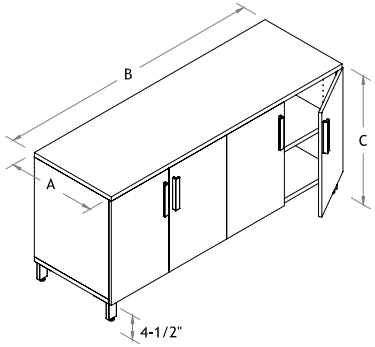

Manufacturing Standards

- Cabinet with 3 or 4 soft close doors depending on unit length;
- 1 adjustable shelf per section;
- Chrome-finish H052 metal handle;
- Chrome-finish metal legs;
- Vertical wood grain on front;
- Height: 29".

See Appendix A for the metal finishes available (no extra charge).

Specify if different handle desired (no extra charge, see p. 149).

Options

Lock

LK
$47 ea.

Electrical Wire Management

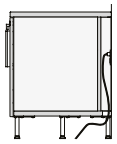

EM
$0

Prices

AR3L / AR3R

Dimensions A B C	Front finish (see Appendix A for further details) Std
204829	1413
244829	1469

ARAR

Dimensions A B C	Front finish (see Appendix A for further details) Std
206029	1580
246029	1645

How to Order

		A B C	AR3L AR3R ARAR	EM	P	WH BL SN **CHR (std)**	**H052 (std)**	LKBL LKSN
	LV							
	series	dimensions	product	electricity (Appx. K)	hutch (Appx. H)	metal finish (Appx. A)	handle (p. 149)	lock (p. 154)
Example	**LV**	206029	ARAR	EM	P	CHR	H052	LKSN

Credenzas

AR3L - Glass Doors

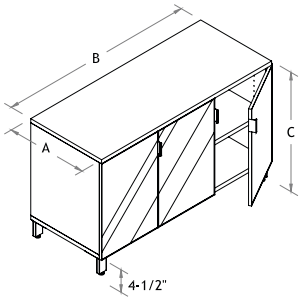

AR3R - Glass Doors

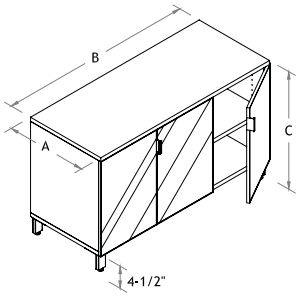

ARAR - Glass Doors

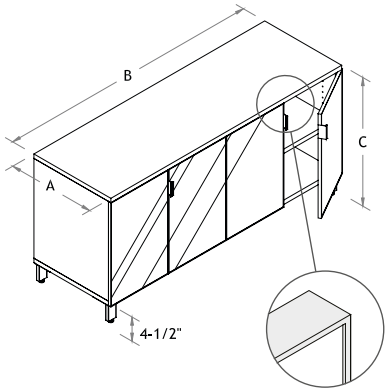

Aluminum frame detail

Manufacturing Standards

- Cabinet with 3 or 4 soft close doors;
- Frosted glass (VS) doors with aluminum-frame and built-in handle;
- 1 adjustable shelf per section;
- Chrome-finish metal legs;
- Height: 29".

Color Glass: *If the choice of glass is not specified, the standard is frosted glass (VS). For other choices of glass, consult the Logiflex color chart.*

See Appendix A for the metal finishes available (no extra charge).

Options

Electrical Wire Management

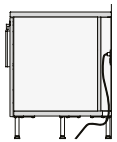

EM
$0

Prices

AR3L / AR3R - Glass Doors

Dimensions A B C	Door insert (see Appendix A for further details)
204829	2818
244829	2881

ARAR - Glass Doors

Dimensions A B C	Door insert (see Appendix A for further details)
206029	3348
246029	3425

How to Order

		A B C	AR3L AR3R ARAR	EM	V4 PL **VS (std)**	P	WH BL SN **CHR (std)**
	LV						
	series	dimensions	product	electricity (Appx. K)	insert (Appx. A)	hutch (Appx. H)	metal finish (Appx. A)
Example	**LV**	206029	ARAR	EM	VS	P	CHR

Credenzas

ARJ

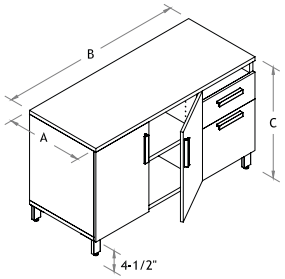

JAR

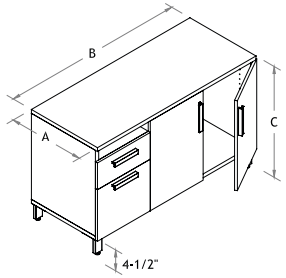

JARJ

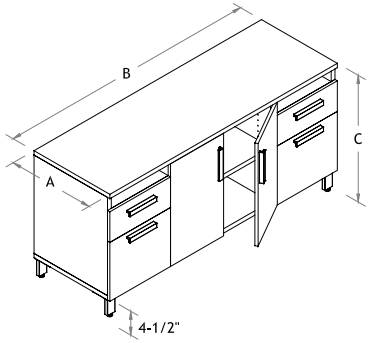

Manufacturing Standards

- Cabinet with 2 soft close doors;
- 1 adjustable shelf;
- 1 or 2 sections with 1 pigeonhole unit, 1 utility drawer and 1 file drawer for letter and legal formats;
- Chrome-finish H052 metal handle;
- Chrome-finish metal legs;
- Vertical wood grain on front;
- Height: 29".

See Appendix A for the metal finishes available (no extra charge).

Specify if different handle desired (no extra charge, see p. 149).

Options

Lock

LK
$47 ea.

Electrical Wire Management

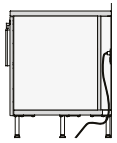

EM
$0

How to Order

		A B C	ARJ JAR JARJ	EM	P	WH BL SN **CHR (std)**	**H052 (std)**	LKBL LKSN
	LV							
	series	dimensions	product	electricity (Appx. K)	hutch (Appx. H)	metal finish (Appx. A)	handle (p. 149)	lock (p. 154)
Example	**LV**	206029	JARJ	EM	P	CHR	H052	LKSN

Prices

ARJ / JAR

Dimensions A B C	Front finish (see Appendix A for further details) Std
204829	1640
244829	1694

JARJ

Dimensions A B C	Front finish (see Appendix A for further details) Std
206029	2169
246029	2237

Credenzas

PGAR3L

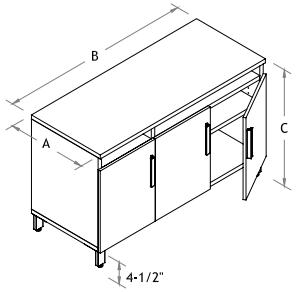

PGAR3R

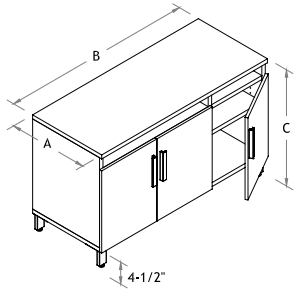

PGARAR

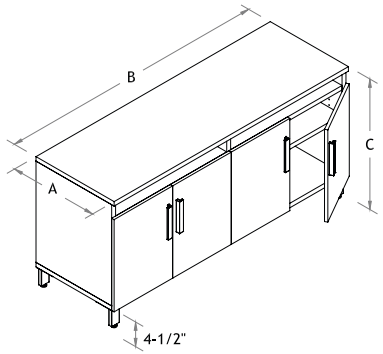

Manufacturing Standards

- Cabinet with 3 or 4 soft close doors depending on unit length;
- 1 pigeonhole unit and 1 adjustable shelf per section;
- Chrome-finish H052 metal handle;
- Chrome-finish metal legs;
- Vertical wood grain on front;
- Height: 29".

See Appendix A for the metal finishes available (no extra charge).

Specify if different handle desired (no extra charge, see p. 149).

Options

Lock

LK
$47 ea.

Electrical Wire Management

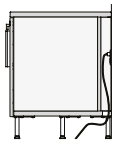

EM
$0

How to Order

		A B C	PGAR3L PGAR3R PGARAR	EM	P	WH BL SN **CHR (std)**	**H052 (std)**	LKBL LKSN
	LV							
	series	dimensions	product	electricity (Appx. K)	hutch (Appx. H)	metal finish (Appx. A)	handle (p. 149)	lock (p. 154)
Example	**LV**	206029	PGARAR	EM	P	CHR	H052	LKSN

Prices

PGAR3L / PGAR3R

Dimensions A B C	Front finish (see Appendix A for further details) Std
204829	1551
244829	1615

PGARAR

Dimensions A B C	Front finish (see Appendix A for further details) Std
206029	1730
246029	1810

Credenzas

SF

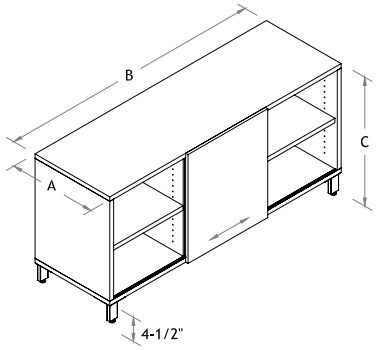

Manufacturing Standards

- 1 sliding front;
- 3 open storage spaces;
- 1 adjustable shelf per section;
- Chrome-finish metal legs;
- Vertical wood grain on front;
- Height: 29".

See Appendix A for the metal finishes available (no extra charge).

Options

Electrical Wire Management

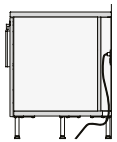

EM
$0

Prices

Dimensions A B C	Front finish (see Appendix A for further details) Std
204829	1424
244829	1482
206029	1499
246029	1566

How to Order

		A B C		EM	P	WH BL SN **CHR (std)**
	LV		**SF**			
	series	dimensions	product	electricity (Appx. K)	hutch (Appx. H)	metal finish (Appx. A)
Example	**LV**	206029	**SF**	EM	P	CHR

Storage Units

Leg Base Storage

UN22

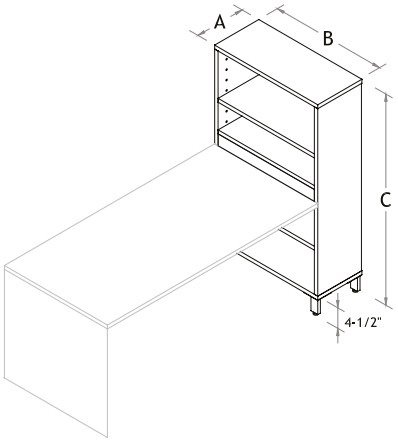

Manufacturing Standards

- 1 adjustable shelf in the lower section;
- 4 chrome-finish metal legs.

Upper section:
42": 0 adjustable shelves
51": 1 adjustable shelf
54": 1 adjustable shelf

See Appendix A for the metal finishes available (no extra charge).

Actual dimension of "B" is 1/2" larger than listed.

Options

Electrical Wire Management Removable Panel

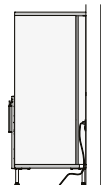

EM
$0

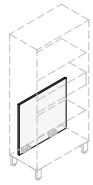

PA
$38

How to Order

	A B C		EM PA	WH BL SN **CHR (std)**
LV		**UN22**		
series	dimensions	product	electricity (Appx. K)	metal finish (Appx. A)
Example **LV**	132442	**UN22**	EM	CHR

Prices

Dimensions A B C	
132442	986
132451	1107
132454	1115
133042	1023
133051	1152
133054	1162
182442	1036
182451	1163
182454	1172
183042	1069
183051	1212
183054	1223
202442	1044
202451	1183
202454	1198
203042	1087
203051	1235
203054	1248

Leg Base Storage

UN23 - 66"

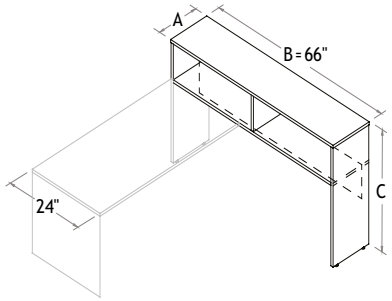

UN23 - 72"

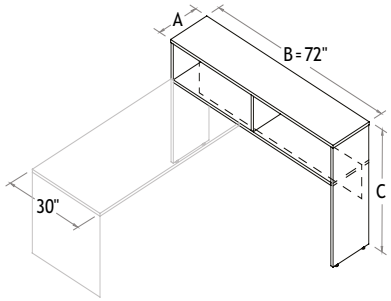

Manufacturing Standards

- 1" laminate leg base;
- PM modesty panel (10"),
3" Recessed;
- Vertical wood grain on leg base;
- Open storage;
- Height: 42".

Options

Back options

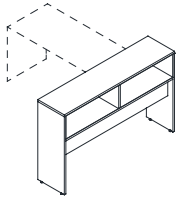

O

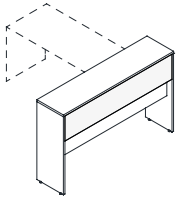

C

Grommets

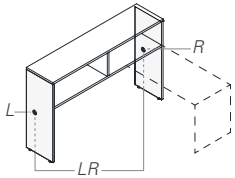

MGR

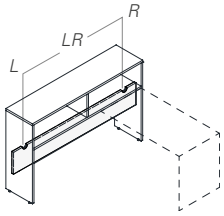

GR

Prices

Dimensions A B C	
166642	744
167242	762

How to Order

		A B C		C **O (std)**	MGRL MGRR MGLR	GRR GRL GLR **NGR (std)**
	LV		**UN23**			
	series	dimensions	product	back	side-leg grommet	modesty grommet
Example	**LV**	167242	**UN23**	O	MGRR	GRL

Sliding Wardrobe Towers

UN09L

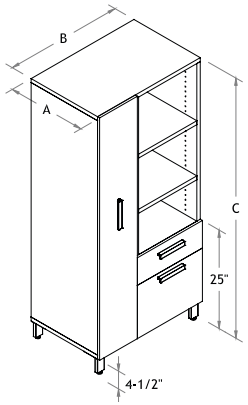

Opening on the right

UN09R

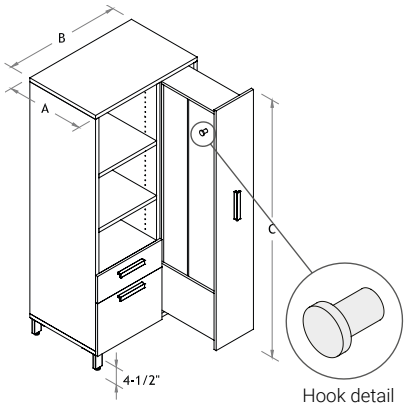

Opening on the left

Hook detail

Manufacturing Standards

- Bookcase storage with adjustable shelves;
- 1 utility drawer;
- 1 file drawer for letter and legal formats;
- Sliding wardrobe with CRLI010 hook;
- Chrome-finish H052 metal handles;
- Ventilation grill in back;
- Chrome-finish metal legs;
- Vertical wood grain on front.

51" to 54": 1 adjustable shelf
60" to 66": 2 adjustable shelves

See Appendix A for the metal finishes available (no extra charge).

Specify if different handle desired (no extra charge, see p. 149).

Options

Lock

LK
$47 ea.

How to Order

		A B C	UN09L UN09R	WH BL SN **CHR (std)**	**H052 (std)**	LKBL LKSN	**CRLI010 (std)**
	LV						
	series	dimensions	product	metal finish (Appx. A)	handle (p. 149)	lock (p. 154)	hook (p. 155)
Example	**LV**	243060	UN09L	CHR	H052	LKSN	CRLI010

Prices

Dimensions A B C	Front finish (see Appendix A for further details) Std
203051	2506
243051	2603
203054	2506
243054	2603
203060	2636
243060	2743
203064	2686
243064	2800
203066	2686
243066	2800

Sliding Wardrobe Towers

UN10L

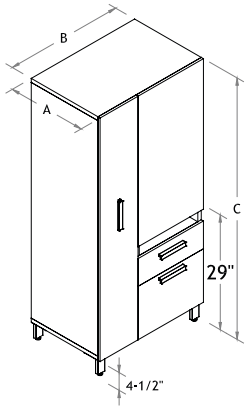

Opening on the right

UN10R

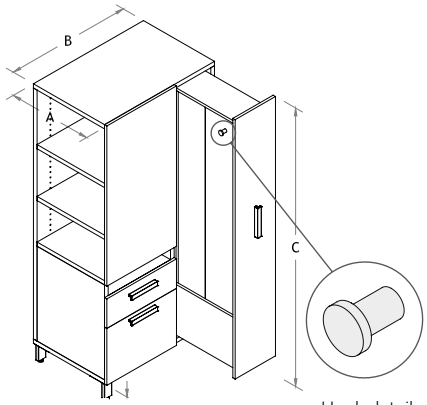

Opening on the left

Hook detail

Manufacturing Standards

- Sliding wardrobe with CRLI010 hook;
- Bookcase section on the side, with adjustable shelves;
- 1 pigeonhole unit;
- 1 utility drawer;
- 1 file drawer for letter and legal formats;
- Chrome-finish H052 metal handles;
- Chrome-finish metal legs;
- Ventilation grill in back;
- Vertical wood grain on front.

51" to 60": 1 adjustable shelf
64" to 66": 2 adjustable shelves

See Appendix A for the metal finishes available (no extra charge).

Specify if different handle desired (no extra charge, see p. 149).

Options

Lock

LK
$47 ea.

Prices

Dimensions A B C	Front finish (see Appendix A for further details) Std
203051	2632
243051	2719
203054	2632
243054	2719
203060	2681
243060	2775
203064	2814
243064	2915
203066	2814
243066	2915

How to Order

		A B C	UN10L UN10R	WH BL SN **CHR (std)**	**H052 (std)**	LKBL LKSN	**CRLI010 (std)**
	LV						
	series	dimensions	product	metal finish (Appx. A)	handle (p. 149)	lock (p. 154)	hook (p. 155)
Example	**LV**	243060	UN10L	CHR	H052	LKSN	CRLI010

Sliding Wardrobe Towers

UN11L

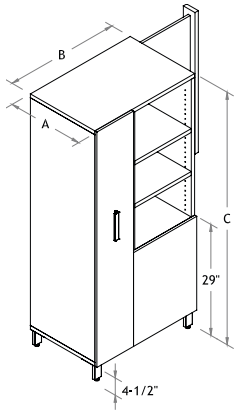

Opening on the right

UN11R

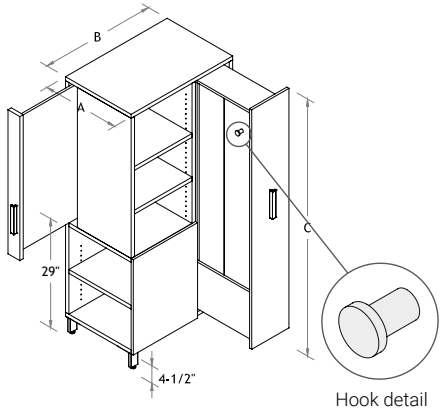

Opening on the left

Hook detail

Manufacturing Standards

- 2 bookcase sections with adjustable shelves;
- Sliding white board with chrome-finish H052 metal handle;
- Sliding wardrobe with CRLI010 hook;
- Chrome-finish H052 metal handle;
- Ventilation grill in back;
- Chrome-finish metal legs;
- Vertical wood grain on front.

51" to 60": 2 adjustable shelves
64" to 66": 3 adjustable shelves

See Appendix A for the metal finishes available (no extra charge).

Specify if different handle desired (no extra charge, see p. 149).

Options

Lock

LK
$47 ea.

How to Order

		A B C	UN11L UN11R	WH BL SN **CHR (std)**	**H052 (std)**	LKBL LKSN	**CRLI010 (std)**
	LV						
	series	dimensions	product	metal finish (Appx. A)	handle (p. 149)	lock (p. 154)	hook (p. 155)
Example	**LV**	243060	UN11L	CHR	H052	LKSN	CRLI010

Prices

Dimensions A B C	Front finish (see Appendix A for further details) Std
203051	3068
243051	3120
203054	3068
243054	3120
203060	3161
243060	3228
203064	3333
243064	3411
203066	3333
243066	3411

Wardrobe Towers

VL

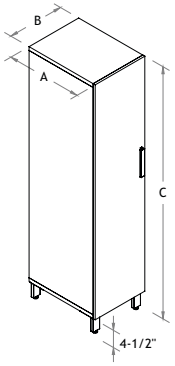

VR

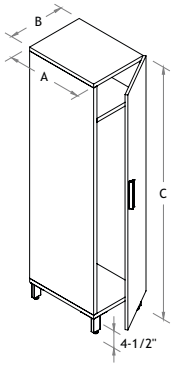

Manufacturing Standards

- Wardrobe with 1 soft close door;
- 1 fixed shelf;
- 1 clothes rail;
- Chrome-finish H052 metal handle;
- Ventilation grill in back;
- Chrome-finish metal legs;
- Vertical wood grain on front.

See Appendix A for the metal finishes available (no extra charge).

Specify if different handle desired (no extra charge, see p. 149).

Options

Lock

LK
$47 ea.

How to Order

		A B C	VL VR	WH BL SN **CHR (std)**	**H052 (std)**	LKBL LKSN
	LV					
	series	dimensions	product	metal finish (Appx. A)	handle (p. 149)	lock (p. 154)
Example	**LV**	241860	VL	CHR	H052	LKSN

Prices

Dimensions A B C	Front finish (see Appendix A for further details) Std
201551	1091
201851	1121
241551	1130
241851	1163
201554	1091
201854	1121
241554	1130
241854	1163
201560	1118
201860	1152
241560	1162
241860	1196
201564	1144
201864	1179
241564	1193
241864	1227
201566	1144
201866	1179
241566	1193
241866	1227

Wardrobe Towers

VL - Glass Doors

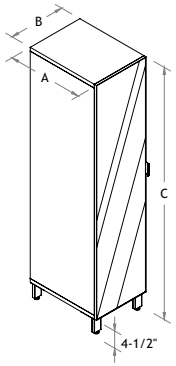

VR - Glass Doors

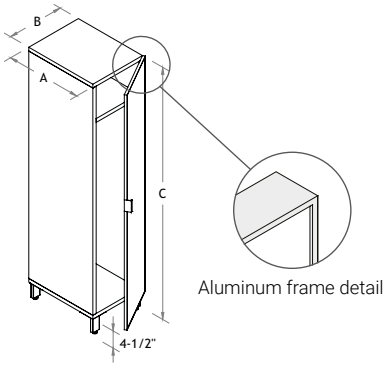

Manufacturing Standards

- Wardrobe with 1 soft close door;
- Frosted glass (VS) door with aluminum-frame and built-in handle;
- 1 fixed shelf;
- 1 clothes rail;
- Ventilation grill in back;
- Chrome-finish metal legs.

Color Glass: *If the choice of glass is not specified, the standard is frosted glass (VS). For other choices of glass, consult the Logiflex color chart.*

See Appendix A for the metal finishes available (no extra charge).

Options

How to Order

		A B C	VL VR	V4 PL **VS (std)**	WH BL SN **CHR (std)**
	LV				
	series	dimensions	product	insert (Appx. A)	metal finish (Appx. A)
Example	**LV**	201860	VL	VS	CHR

Prices

Dimensions A B C	Door insert (see Appendix A for further details)
201551	1966
201851	2099
241551	2014
241851	2150
201554	1966
201854	2099
241554	2014
241854	2150
201560	2069
201860	2218
241560	2119
241860	2268
201564	2171
201864	2332
241564	2224
241864	2382
201566	2171
201866	2332
241566	2224
241866	2382

Wardrobe Towers

UN05L

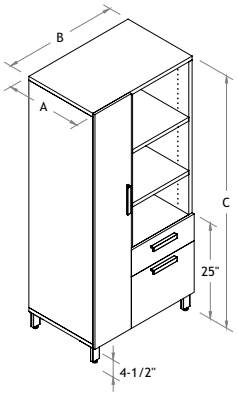

UN05R

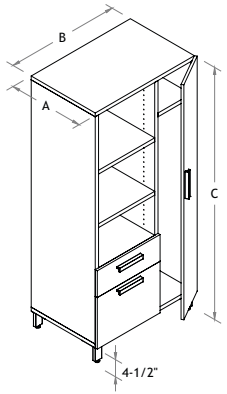

Manufacturing Standards

- Wardrobe section with 1 soft close door,1 fixed shelf, 1 clothes rail and ventilation grill in back;
- Bookcase storage with adjustable shelves;
- 1 utility drawer;
- 1 file drawer for letter and legal formats;
- Chrome-finish H052 metal handle;
- Chrome-finish metal legs;
- Vertical wood grain on front.

51" to 60": 1 adjustable shelf
64" to 66": 2 adjustable shelves

See Appendix A for the metal finishes available (no extra charge).

Specify if different handle desired (no extra charge, see p. 149).

Options

Lock

LK
$47 ea.

How to Order

		A B C	UN05L UN05R	WH BL SN **CHR (std)**	**H052 (std)**	LKBL LKSN
	LV					
	series	dimensions	product	metal finish (Appx. A)	handle (p. 149)	lock (p. 154)
Example	**LV**	243060	UN05L	CHR	H052	LKSN

Prices

Dimensions A B C	Front finish (see Appendix A for further details) Std
203051	1809
243051	1886
203054	1809
243054	1886
203060	1923
243060	2001
203064	1962
243064	2058
203066	1962
243066	2058

Wardrobe Towers

UN05L - Glass Doors

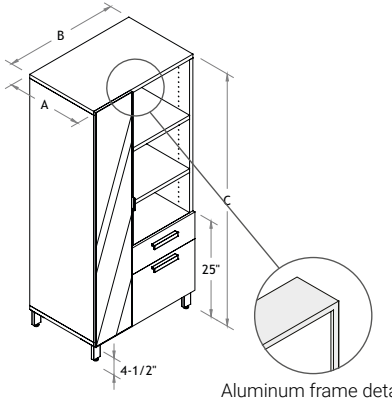

Aluminum frame detail

UN05R - Glass Doors

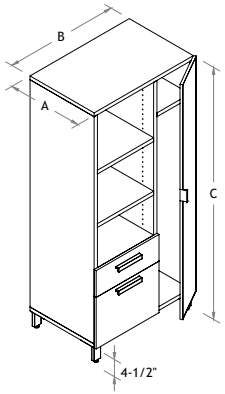

Manufacturing Standards

- Wardrobe section with 1 soft close door,1 fixed shelf, 1 clothes rail and ventilation grill in back;
- Frosted glass (VS) doors with aluminum-frame and built-in handle;
- Bookcase storage with adjustable shelves;
- 1 utility drawer;
- 1 file drawer for letter and legal formats;
- Chrome-finish H052 metal handle;
- Chrome-finish metal legs;
- Vertical wood grain on front.

51" to 60": 1 adjustable shelf
64" to 66": 2 adjustable shelves

Color Glass: *If the choice of glass is not specified, the standard is frosted glass (VS). For other choices of glass, consult the Logiflex color chart.*

See Appendix A for the metal finishes available (no extra charge).

Specify if different handle desired (no extra charge, see p. 149).

Options

Lock

Not available on glass doors

LK
$47 ea.

How to Order

		A B C	UN05L UN05R	V4 PL **VS (std)**	WH BL SN **CHR (std)**	**H052 (std)**	LKBL LKSN
	LV						
	series	dimensions	product	insert (Appx. A)	metal finish (Appx. A)	handle (p. 149)	lock (p. 154)
Example	**LV**	243060	UN05L	VS	CHR	H052	LKSN

Prices

Dimensions A B C	Door insert (see Appendix A for further details)
203051	2660
243051	2754
203054	2660
243054	2754
203060	2852
243060	2956
203064	2953
243064	3063
203066	2953
243066	3063

Wardrobe Towers

UN06L

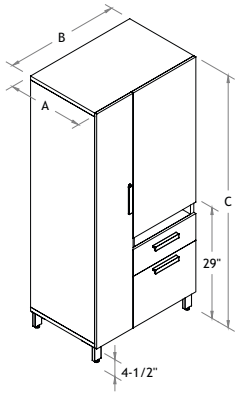

UN06R

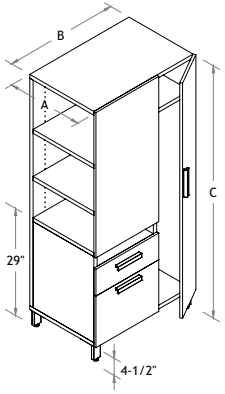

Manufacturing Standards

- Wardrobe section with 1 soft close door,1 fixed shelf, 1 clothes rail and ventilation grill in back;
- Chrome-finish H052 metal handle;
- Bookcase storage on the side, with adjustable shelves;
- 1 section with 1 pigeonhole unit, 1 utility drawer and 1 file drawer for letter and legal formats;
- Chrome-finish metal legs;
- Vertical wood grain on front.

51" to 60": 1 adjustable shelf
64" to 66": 2 adjustable shelves

See Appendix A for the metal finishes available (no extra charge).

Specify if different handle desired (no extra charge, see p. 149).

Options

Lock

LK
$47 ea.

How to Order

		A B C	UN06L UN06R	WH BL SN **CHR (std)**	**H052 (std)**	LKBL LKSN
	LV					
	series	dimensions	product	metal finish (Appx. A)	handle (p. 149)	lock (p. 154)
Example	**LV**	243060	UN06L	CHR	H052	LKSN

Prices

Dimensions A B C	Front finish (see Appendix A for further details) Std
203051	1929
243051	2011
203054	1929
243054	2011
203060	1971
243060	2048
203064	2092
243064	2175
203066	2092
243066	2175

Wardrobe Towers

UN07L

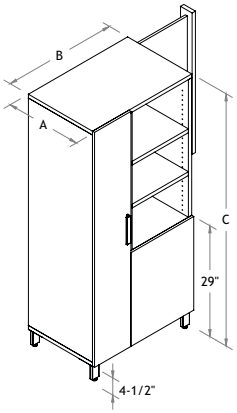

UN07R

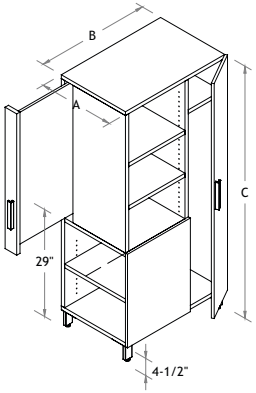

Manufacturing Standards

- Wardrobe section with 1 soft close door,1 fixed shelf, 1 clothes rail and ventilation grill in back;
- 2 bookcase sections with adjustable shelves;
- Sliding white board with chrome-finish H052 metal handle;
- Chrome-finish metal legs;
- Vertical wood grain on front.

51" to 60": 2 adjustable shelves
64" to 66": 3 adjustable shelves

See Appendix A for the metal finishes available (no extra charge).

Specify if different handle desired (no extra charge, see p. 149).

Options

Lock

LK
$47 ea.

How to Order

		A B C	UN07L UN07R	WH BL SN **CHR (std)**	**H052 (std)**	LKBL LKSN
	LV					
	series	dimensions	product	metal finish (Appx. A)	handle (p. 149)	lock (p. 154)
Example	**LV**	243060	UN07L	CHR	H052	LKSN

Prices

Dimensions A B C	Front finish (see Appendix A for further details) Std
203051	2363
243051	2431
203054	2363
243054	2431
203060	2449
243060	2522
203064	2607
243064	2691
203066	2607
243066	2691

Storage Towers

ARL

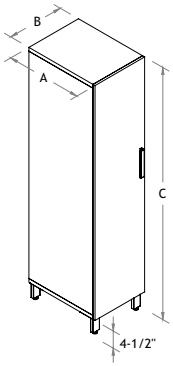

ARR

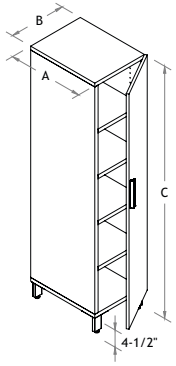

Manufacturing Standards

- Cabinet with 1 soft close door;
- Adjustable shelves;
- Chrome-finish H052 metal handle;
- Chrome-finish metal legs;
- Vertical wood grain on front.

51" to 60": 3 adjustable shelves
64" to 66": 4 adjustable shelves

See Appendix A for the metal finishes available (no extra charge).

Specify if different handle desired (no extra charge, see p. 149).

Options

Lock

LK
$47 ea.

Electrical Wire Management

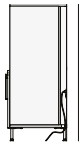

EM
$0

How to Order

		A B C	ARL ARR	EM	WH BL SN **CHR (std)**	**H052 (std)**	LKBL LKSN
	LV						
	series	dimensions	product	electricity (Appx. K)	metal finish (Appx. A)	handle (p. 149)	lock (p. 154)
Example	**LV**	241860	ARL	EM	CHR	H052	LKSN

Prices

Dimensions A B C	Front finish (see Appendix A for further details) Std
201551	1213
201851	1249
241551	1258
241851	1302
201554	1213
201854	1249
241554	1258
241854	1302
201560	1242
201860	1281
241560	1291
241860	1336
201564	1343
201864	1386
241564	1398
241864	1449
201566	1343
201866	1386
241566	1398
241866	1449

Storage Towers

ARL - Glass Doors

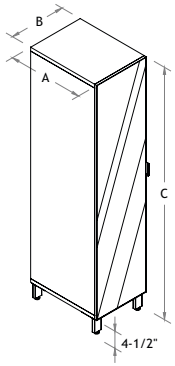

ARR - Glass Doors

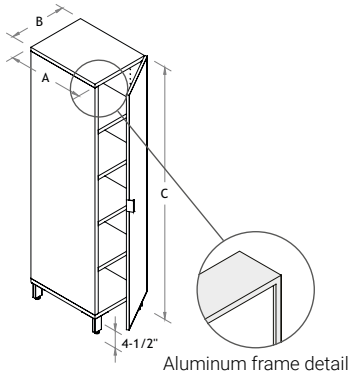

Aluminum frame detail

Manufacturing Standards

- Cabinet with 1 soft close door;
- Frosted glass (VS) door with aluminum-frame and built-in handle;
- Adjustable shelves;
- Chrome-finish metal legs.

51" to 60": 3 adjustable shelves
64" to 66": 4 adjustable shelves

Color Glass: *If the choice of glass is not specified, the standard is frosted glass (VS). For other choices of glass, consult the Logiflex color chart.*

See Appendix A for the metal finishes available (no extra charge).

Options

Electrical Wire Management

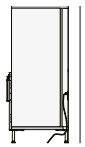

EM
$0

How to Order

	A B C	ARL ARR	EM	V4 PL **VS (std)**	WH BL SN **CHR (std)**
LV					
series	dimensions	product	electricity (Appx. K)	insert (Appx. A)	metal finish (Appx. A)
Example **LV**	201860	ARL	EM	VS	CHR

Prices

Dimensions A B C	Door insert (see Appendix A for further details)
201551	2109
201851	2251
241551	2163
241851	2308
201554	2109
201854	2251
241554	2163
241854	2308
201560	2209
201860	2363
241560	2269
241860	2426
201564	2398
201864	2569
241564	2461
241864	2640
201566	2398
201866	2569
241566	2461
241866	2640

Storage Towers

UN13D

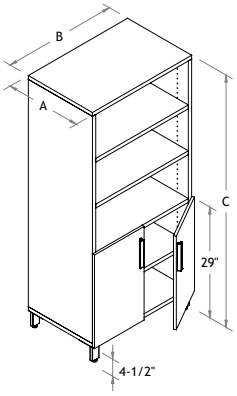

Door height: 29"

UN13P

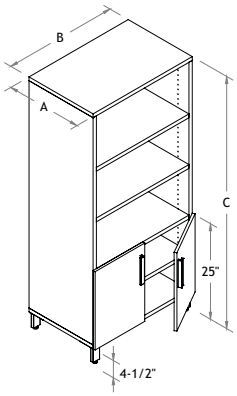

Door height: 25"

Manufacturing Standards

- Bookcase section with adjustable shelves;
- Cabinet section with 2 soft close doors, 1 adjustable shelf and chrome-finish H052 metal handles;
- Chrome-finish metal legs;
- Vertical wood grain on front.

51" to 54": 2 adjustable shelves
60" to 66": 3 adjustable shelves

See Appendix A for the metal finishes available (no extra charge).

Specify if different handle desired (no extra charge, see p. 149).

Options

Lock

LK
$47 ea.

Electrical Wire Management

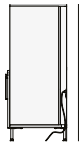

EM
$0

How to Order

		A B C	UN13D UN13P	EM	WH BL SN **CHR (std)**	**H052 (std)**	LKBL LKSN
	LV						
	series	dimensions	product	electricity (Appx. K)	metal finish (Appx. A)	handle (p. 149)	lock (p. 154)
Example	**LV**	243060	UN13D	EM	CHR	H052	LKSN

Prices

Dimensions A B C	Front finish (see Appendix A for further details) Std
203051	1273
243051	1333
203054	1273
243054	1333
203060	1381
243060	1449
203064	1404
243064	1475
203066	1404
243066	1475

Storage Towers

UN14

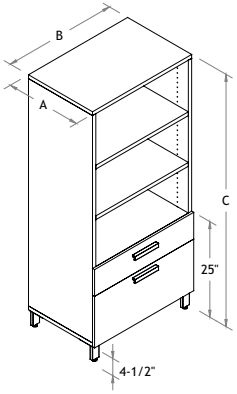

Manufacturing Standards

- Bookcase section with adjustable shelves;
- 1 utility drawer with built-in divider;
- 1 file drawer for letter and legal formats;
- Chrome-finish H052 metal handle on drawer fronts;
- Chrome-finish metal legs;
- Vertical wood grain on front.

51" to 54": 1 adjustable shelf
60" to 66": 2 adjustable shelves

See Appendix A for the metal finishes available (no extra charge).

Specify if different handle desired (no extra charge, see p. 149).

Options

Lock

LK
$47 ea.

Electrical Wire Management

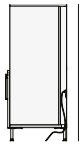

EM
$0

How to Order

		A B C		EM	WH BL SN **CHR (std)**	**H052 (std)**	LKBL LKSN
	LV		**UN14**				
	series	dimensions	product	electricity (Appx. K)	metal finish (Appx. A)	handle (p. 149)	lock (p. 154)
Example	**LV**	243060	**UN14**	EM	CHR	H052	LKSN

Prices

Dimensions A B C	Front finish (see Appendix A for further details) Std
203051	1398
243051	1450
203054	1398
243054	1450
203060	1504
243060	1566
203064	1526
243064	1593
203066	1526
243066	1593

Storage Towers

UN16

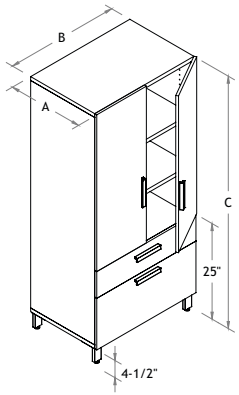

Manufacturing Standards

- Cabinet section with 2 soft close doors;
- Adjustable shelves;
- 1 utility drawer with built-in divider;
- 1 lateral file drawer for letter and legal formats;
- Chrome-finish H052 metal handle;
- Chrome-finish metal legs;
- Vertical wood grain on front.

51" to 54": 1 adjustable shelf
60" to 66": 2 adjustable shelves

See Appendix A for the metal finishes available (no extra charge).

Specify if different handle desired (no extra charge, see p. 149).

Options

Lock

LK
$47 ea.

Electrical Wire Management

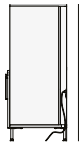

EM
$0

How to Order

		A B C		EM	WH BL SN **CHR (std)**	**H052 (std)**	LKBL LKSN
	LV		**UN16**				
	series	dimensions	product	electricity (Appx. K)	metal finish (Appx. A)	handle (p. 149)	lock (p. 154)
Example	**LV**	243060	**UN16**	EM	CHR	H052	LKSN

Prices

Dimensions A B C	Front finish (see Appendix A for further details) Std
203051	1615
243051	1666
203054	1615
243054	1666
203060	1732
243060	1792
203064	1769
243064	1831
203066	1769
243066	1831

Shared Storage Towers

UND03L

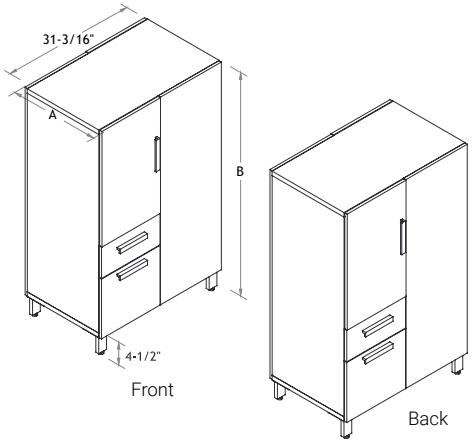

UND03R

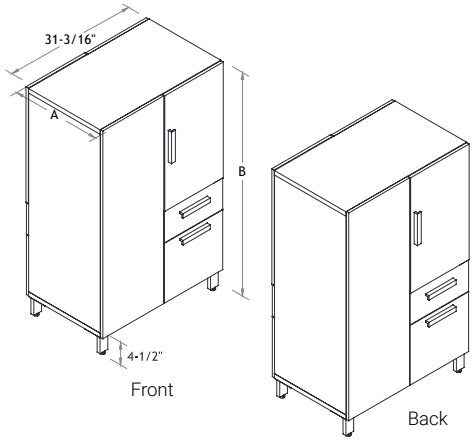

Manufacturing Standards

- Cabinet on each side with 1 soft close door;
- Adjustable shelves;
- 1 utility drawer per side;
- 1 file drawer per side for letter and legal formats;
- Chrome-finish H052 metal handle;
- Chrome-finish metal legs;
- Vertical wood grain on front.

51" to 54": 1 adjustable shelf
60" to 66": 2 adjustable shelves

See Appendix A for the metal finishes available (no extra charge).

Specify if different handle desired (no extra charge, see p. 149).

Options

Lock

LK
$47 ea.

Marker Board

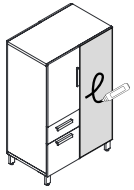

MB
$483

How to Order

		A B	UND03L UND03R	WH BL SN **CHR (std)**	MB	**H052 (std)**	LKBL LKSN
	LV						
	series	dimensions	product	metal finish (Appx. A)	marker board	handle (p. 149)	lock (p. 154)
Example	**LV**	2060	UND03L	CHR		H052	LKSN

Prices

Dimensions A B	Front finish (see Appendix A for further details) Std
2051	2047
2054	2089
2060	2128
2064	2170
2066	2209
2451	2279
2454	2320
2460	2362
2464	2404
2466	2446

Bookcases

BBL 29

29" high - 1 adjustable shelf

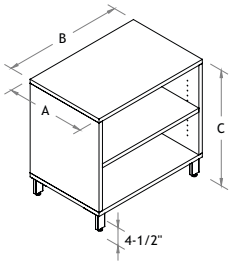

BBL 36

36" high - 2 adjustable shelves

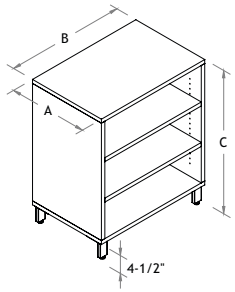

Manufacturing Standards

- Bookcase with adjustable shelves;
- Chrome-finish metal legs.

See Appendix A for the metal finishes available (no extra charge).

Options

Electrical Wire Management

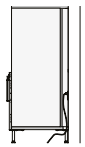

EM
$0

How to Order

		A B C		EM	WH BL SN **CHR (std)**
	LV		**BBL**		
	series	dimensions	product	electricity (Appx. K)	metal finish (Appx. A)
Example	**LV**	243036	**BBL**	EM	CHR

Prices

BBL 29

Dimensions A B C	
162429	765
163029	794
163629	821
182429	791
183029	821
183629	857
202429	808
203029	840
203629	878
242429	839
243029	881
243629	921

BBL 36

Dimensions A B C	
162436	867
163036	904
163636	946
182436	901
183036	946
183636	985
202436	925
203036	968
203636	1012
242436	964
243036	1018
243636	1069

Bookcases

BBL 42

42" high - 2 adjustable shelves

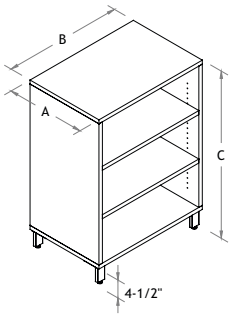

BBL 48

48" high - 3 adjustable shelves

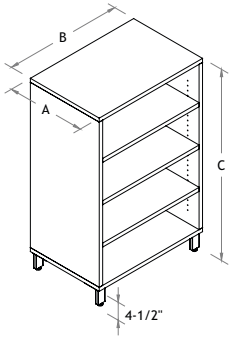

Manufacturing Standards

- Bookcase with adjustable shelves;
- Chrome-finish metal legs.

See Appendix A for the metal finishes available (no extra charge).

Options

Electrical Wire Management

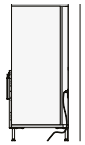

EM
$0

Prices

BBL 42

Dimensions A B C	
162442	890
163042	929
163642	968
182442	926
183042	968
183642	1011
202442	949
203042	995
203642	1040
242442	994
243042	1045
243642	1099

BBL 48

Dimensions A B C	
162448	991
163048	1038
163648	1083
182448	1032
183048	1083
183648	1138
202448	1058
203048	1115
203648	1173
242448	1114
243048	1179
243648	1245

How to Order

		A B C		EM	WH BL SN **CHR (std)**
	LV		**BBL**		
	series	dimensions	product	electricity (Appx. K)	metal finish (Appx. A)
Example	**LV**	243048	**BBL**	EM	CHR

Bookcases

BBL 51

51" high - 3 adjustable shelves

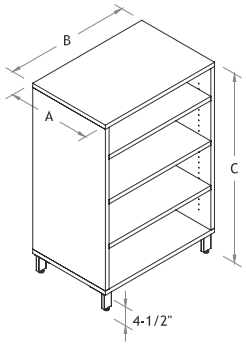

BBL 54

54" high - 3 adjustable shelves

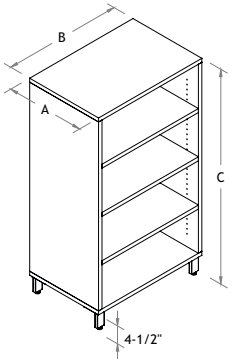

Manufacturing Standards

- Bookcase with adjustable shelves;
- Chrome-finish metal legs.

See Appendix A for the metal finishes available (no extra charge).

Options

Electrical Wire Management

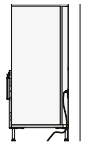

EM
$0

How to Order

		A B C		EM	WH BL SN **CHR (std)**
	LV		**BBL**		
	series	dimensions	product	electricity (Appx. K)	metal finish (Appx. A)
Example	**LV**	243054	**BBL**	EM	CHR

Prices

BBL 51

Dimensions A B C	
162451	1080
163051	1131
163651	1179
182451	1125
183051	1179
183651	1235
202451	1155
203051	1213
203651	1273
242451	1213
243051	1281
243651	1345

BBL 54

Dimensions A B C	
162454	1080
163054	1131
163654	1179
182454	1125
183054	1179
183654	1235
202454	1155
203054	1213
203654	1273
242454	1213
243054	1281
243654	1345

Bookcases

BBL 60

60" high - 3 adjustable shelves

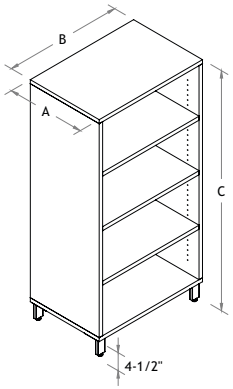

BBL 64

64" high - 4 adjustable shelves

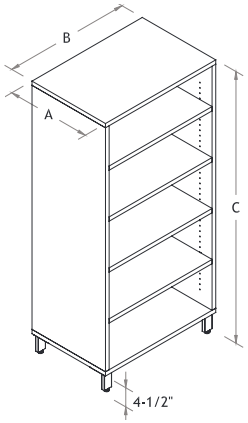

Options

Electrical Wire Management

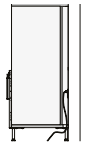

EM
$0

How to Order

		A B C		EM	WH BL SN **CHR (std)**
	LV		**BBL**		
	series	dimensions	product	electricity (Appx. K)	metal finish (Appx. A)
Example	**LV**	243064	**BBL**	EM	CHR

Manufacturing Standards

- Bookcase with adjustable shelves;
- Chrome-finish metal legs.

See Appendix A for the metal finishes available (no extra charge).

Prices

BBL 60

Dimensions A B C	
162460	1102
163060	1154
163660	1205
182460	1147
183060	1206
183660	1261
202460	1179
203060	1241
203660	1302
242460	1242
243060	1310
243660	1379

BBL 64

Dimensions A B C	
162464	1203
163064	1261
163664	1320
182464	1256
183064	1320
183664	1388
202464	1291
203064	1362
203664	1433
242464	1362
243064	1441
243664	1522

Bookcases

BBL 66

66" high - 4 adjustable shelves

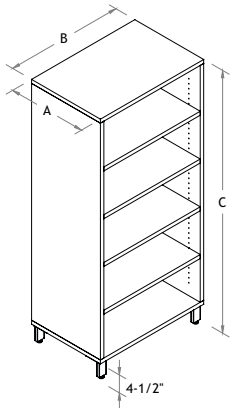

Manufacturing Standards

- Bookcase with adjustable shelves;
- Chrome-finish metal legs.

See Appendix A for the metal finishes available (no extra charge).

Options

Electrical Wire Management

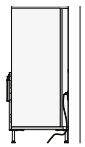

EM
$0

Prices

BBL 66

Dimensions A	B	C
162466		1203
163066		1261
163666		1320
182466		1256
183066		1320
183666		1388
202466		1291
203066		1362
203666		1433
242466		1362
243066		1441
243666		1522

How to Order

		A B C		EM	WH BL SN **CHR (std)**
	LV		**BBL**		
	series	dimensions	product	electricity (Appx. K)	metal finish (Appx. A)
Example	**LV**	243066	**BBL**	EM	CHR

Collaborative Furniture

Surface Units

HBBL

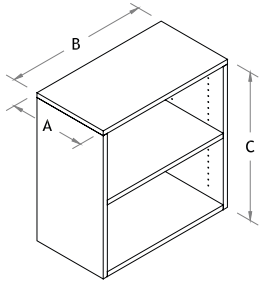

Manufacturing Standards

- Surface bookcase with adjustable shelf/shelves.

25"H to 31"H: 1 adjustable shelf
37"H: 2 adjustable shelves

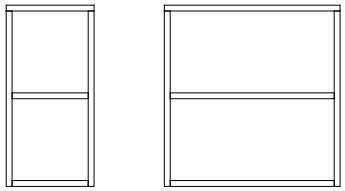

15" 30"

Prices

Dimensions A B C	
161525	522
163025	589
161531	540
163031	609
161537	555
163037	628

How to Order

	A B C	
LV		HBBL
series	dimensions	product
Example LV	163031	HBBL

Shelf for Shared Desks

SDC

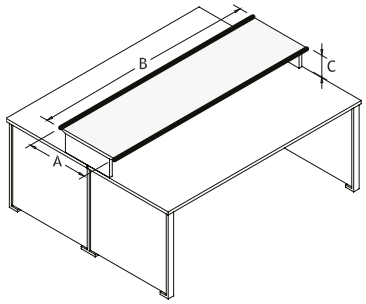

SDF

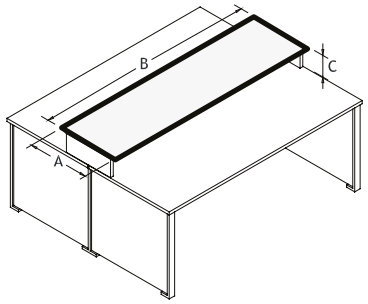

SDS

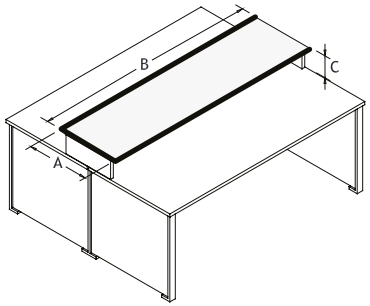

Manufacturing Standards

- Delivered disassembled;
- 1" laminate top with knife edge;
- Work surface mounting hardware.

Prices

Dimensions A B C	
113007	394
113607	417
114207	438
114807	459
115407	510
116007	533
116607	557
117207	577
117807	603
118407	623
143007	424
143607	451
144207	478
144807	504
145407	563
146007	590
146607	617
147207	644
147807	671
148407	697
203007	482
203607	521
204207	555
204807	593
205407	661
206007	696
206607	735
207207	773
207807	810
208407	847

Front View

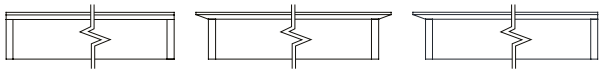

SDC
Knife edge on 2 sides

SDF
Knife edge on 4 sides

SDS
Knife edge on 3 sides

Side view

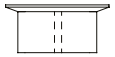

Standard

How to Order

	A B C	SDC SDF SDS
LV		
series	dimensions	product
Example LV	207207	SDS

Shelf for Shared Desks

SH

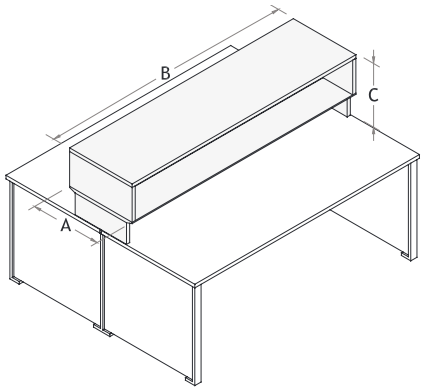

Front View

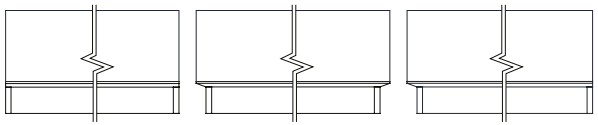

SHC
Knife edge on 2 sides

SHF
Knife edge on 4 sides

SHS
Knife edge on 3 sides

Side View

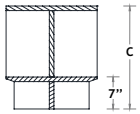

Manufacturing Standards

- Delivered disassembled;
- 1" laminate shelf with integrated hutch and knife edge, 17"H;
- Work surface mounting hardware.

COM Fabrics: *COM Fabrics are provided by the customer. For pricing please refer GR2 grade price.*

Options

Tackboard

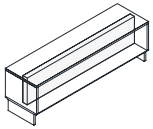

BA

See Appendix C for how to specify upholstery

	GRA	GR1	GR2	GR3	GR4	GR5	GR6	GR7	GR8	GR9	GR10	GR11	GR12	Leather
BA	$676	$712	$759	$806	$866	$926	$986	$1044	$1104	$1164	$1224	$1342	$1462	$1362

Prices

Dimensions A B C	
113017	574
113617	606
114217	633
114817	664
115417	722
116017	752
116617	781
117217	814
117817	842
118417	868
143017	611
143617	646
144217	682
144817	717
145417	780
146017	817
146617	857
147217	888
147817	926
148417	959
203017	683
203617	731
204217	777
204817	824
205417	901
206017	949
206617	996
207217	1041
207817	1089
208417	1137

How to Order

	series	dimensions (A B C)	product (SHC SHF SHS)	tackboard (BA)
	LV			
Example	LV	207217	SHC	BA

Shelf for Shared Desks

SH

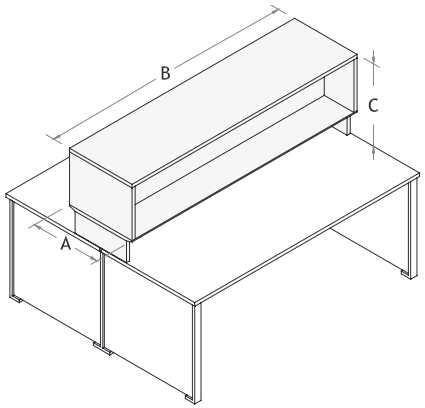

Front View

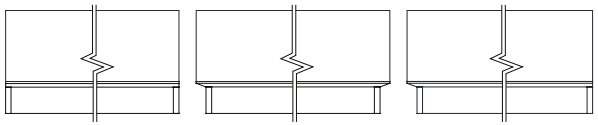

SHC
Knife edge on 2 sides

SHF
Knife edge on 4 sides

SHS
Knife edge on 3 sides

Side View

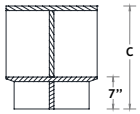

Manufacturing Standards

- Delivered disassembled;
- 1" laminate shelf with integrated hutch and knife edge, 22"H;
- Work surface mounting hardware.

COM Fabrics: *COM Fabrics are provided by the customer. For pricing please refer GR2 grade price.*

Options

Tackboard

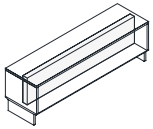

BA

See Appendix C for how to specify upholstery

	GRA	GR1	GR2	GR3	GR4	GR5	GR6	GR7	GR8	GR9	GR10	GR11	GR12	Leather
BA	$676	$712	$759	$806	$866	$926	$986	$1044	$1104	$1164	$1224	$1342	$1462	$1362

How to Order

		A B C	SHC SHF SHS	BA
	LV			
	series	dimensions	product	tackboard
Example	LV	207222	SHC	BA

Prices

Dimensions A B C	
113022	590
113622	619
114222	652
114822	682
115422	743
116022	774
116622	808
117222	838
117822	867
118422	901
143022	625
143622	662
144222	698
144822	739
145422	803
146022	839
146622	880
147222	914
147822	953
148422	991
203022	697
203622	747
204222	796
204822	843
205422	923
206022	971
206622	1023
207222	1071
207822	1118
208422	1167

Wall Hutches

WWST

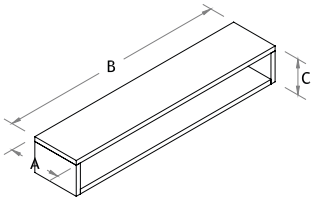

Manufacturing Standards

- 5/8" laminate construction;
- Z-bar wall mount;
- Closed back.

Actual exterior height (C): 7-5/8"

Interior height: 6-1/4"

Attention: *Logiflex is not responsible for the installation of wall hutches. This responsibility belongs entirely to the distributor or the client.*

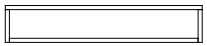

15" to 54" wide

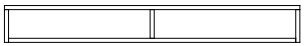

60" to 84" wide

Prices

Dimensions A B C	
101507	444
102407	458
103007	472
103607	481
104207	491
104807	565
105407	574
106007	664
106607	698
107207	710
107807	720
108407	733

How to Order

		A B C	
	LV		**WWST**
	series	dimensions	product
Example	**LV**	104807	**WWST**

Wall Hutches

HOW

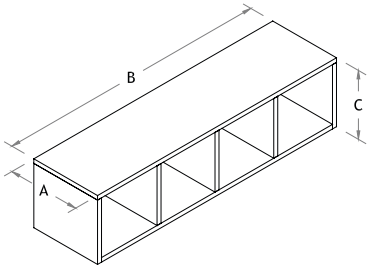

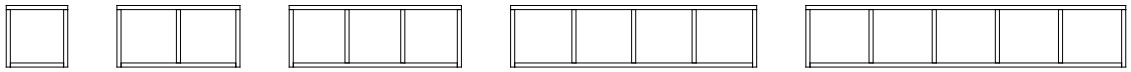

15" wide | 24" to 30" wide | 36" to 42" wide | 48" to 60" wide | 66" to 84" wide

Manufacturing Standards

- Open wall unit;
- Z-bar wall mount.

Interior height: 13".

Dividers: *Offered as option. Pre-drilled holes for dividers (DVD), set of 3 wire dividers included.*

Attention: *Logiflex is not responsible for the installation of wall hutches. This responsibility belongs entirely to the distributor or the client.*

Options

Task-Light Concealer

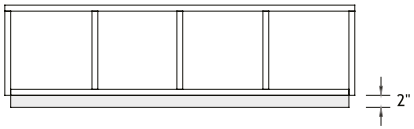

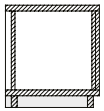

TV
$164

Pre-drilled Holes with 3 Dividers

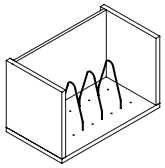

DVD
$31

Task Light

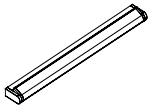

T5
DEL20
$$

Prices

Dimensions A B C	
161515	441
162415	531
163015	548
163615	628
164215	646
164815	788
165415	808
166015	824
166615	929
167215	949
167815	963
168415	982

How to Order

		A B C		TV	DVD	T524 T536 T548 DEL20
	LV		HOW			
	series	dimensions	product	task-light concealer	dividers	task light (p. 163)
Example	LV	164815	HOW	TV	DVD	

Wall Hutches

ARW

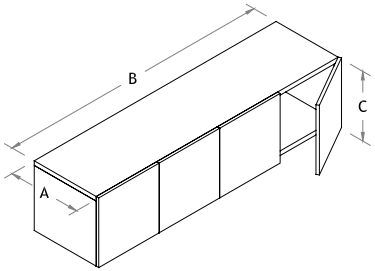

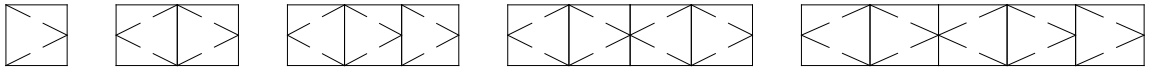

* 15" wide | 24" to 30" wide | * 36" to 42" wide | 48" to 60" wide | * 66" to 84" wide

* Specify which direction the single door opens, right (R) or left (L).

Manufacturing Standards

- 1-, 2-, 3-, 4- or 5-door cabinet;
- Vertical wood grain on front;
- Z-bar wall mount.

Interior height: 12-1/4".

Dividers: *Offered as option. Pre-drilled holes for dividers (DVD), set of 3 wire dividers included.*

Handles: *To add handles, please choose from the Logiflex list, see p. 159. Add $14 retail each.*

Attention: *Logiflex is not responsible for the installation of wall hutches. This responsibility belongs entirely to the distributor or the client.*

Options

Lock

LK
$47 ea.

Task-Light Concealer

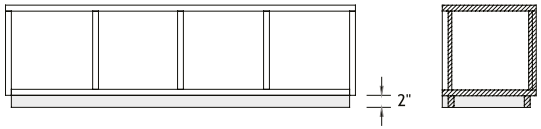

TV
$164

Pre-drilled Holes with 3 Dividers

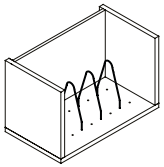

DVD
$31

Task Light

T5
DEL20
$$

Prices

Dimensions A B C	Front finish (see Appendix A for further details) Std
161515	505
162415	615
163015	637
163615	788
164215	813
164815	959
165415	983
166015	1006
166615	1176
167215	1202
167815	1223
168415	1246

How to Order

		A B C		L **R (std)**	TV	LKBL LKSN	DVD		T524 T536 T548 DEL20
	LV		**ARW**						
	series	dimensions	product	single door direction	task-light concealer	lock (p. 154)	dividers	handle (p. 149)	task light (p. 163)
Example	**LV**	164215	**ARW**	R	TV	LKSN	DVD		

Wall Hutches

ARW - Glass Doors

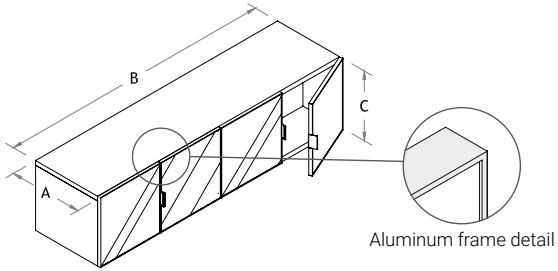

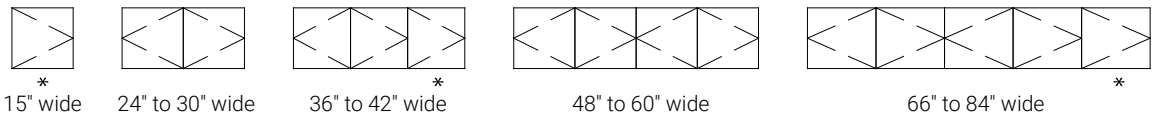

15" wide | 24" to 30" wide | 36" to 42" wide | 48" to 60" wide | 66" to 84" wide

* Specify which direction the single door opens, right (R) or left (L).

Manufacturing Standards

- Cabinet with 1, 2, 3, 4 or 5 soft close doors;
- Frosted glass (VS) doors with aluminum-frame and built-in handle;
- Z-bar wall mount.

Interior height: 12-1/4".

Dividers: *Offered as option. Pre-drilled holes for dividers (DVD), set of 3 wire dividers included.*

Color Glass: *If the choice of glass is not specified, the standard is frosted glass (VS). For other choices of glass, consult the Logiflex color chart.*

Attention: *Logiflex is not responsible for the installation of wall hutches. This responsibility belongs entirely to the distributor or the client.*

Options

Task-Light Concealer

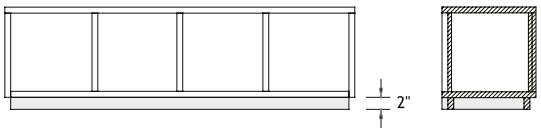

TV
$164

Pre-drilled Holes with 3 Dividers

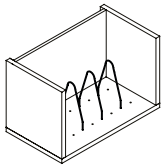

DVD
$31

Task Light

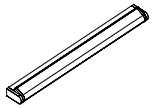

T5
DEL20
$$

Prices

Dimensions A B C	Door insert (see Appendix A for further details)
161515	855
162415	1161
163015	1246
163615	1582
164215	1672
164815	2005
165415	2094
166015	2178
166615	2544
167215	2632
167815	2719
168415	2809

How to Order

		A B C		L **R (std)**	V4 PL **VS (std)**	TV	DVD	T524 T536 T548 DEL20
	LV		**ARW**					
	series	dimensions	product	single door direction	insert (Appx. A)	task-light concealer	dividers	task light (p. 163)
Example	**LV**	164215	**ARW**	R	VS	TV	DVD	

Wall Hutches

SDW

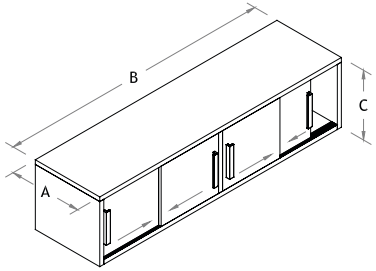

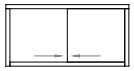

24" to 48" wide

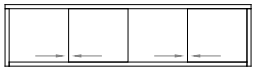

54" to 84" wide

Manufacturing Standards

- Cabinet with 2 or 4 sliding doors;
- Chrome-finish H052 metal handle;
- Vertical wood grain on front;
- Z-bar wall mount.

Interior height: 13".

Dividers: *Offered as option. Pre-drilled holes for dividers (DVD), set of 3 wire dividers included.*

Specify if different handle desired (no extra charge, see p. 149).

Attention: *Logiflex is not responsible for the installation of wall hutches. This responsibility belongs entirely to the distributor or the client.*

Options

Task-Light Concealer

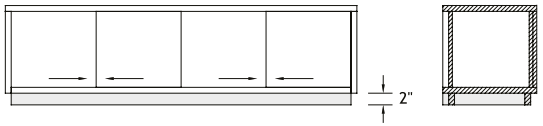

TV
$164

Pre-drilled Holes with 3 Dividers

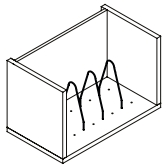

DVD
$31

Task Light

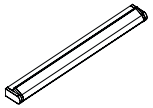

T5
DEL20
$$

Prices

Dimensions A B C	Front finish (see Appendix A for further details) Std
162415	757
163015	785
163615	815
164215	840
164815	930
165415	1273
166015	1301
166615	1352
167215	1379
167815	1406
168415	1433

How to Order

		A B C		TV	**H052 (std)**	DVD	T524 T536 T548 DEL20
	LV		**SDW**				
	series	dimensions	product	task-light concealer	handle (p. 149)	dividers	task light (p. 163)
Example	**LV**	164815	**SDW**	TV	H052	DVD	

Wall Hutches

SFW

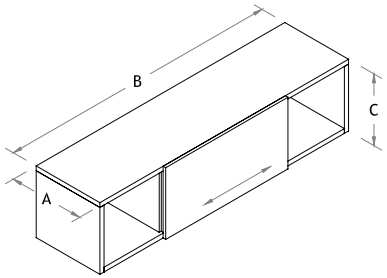

Manufacturing Standards

- Wall cabinet with 1 sliding door on front;
- Vertical wood grain on front;
- Z-bar wall mount.

Interior height: 13".

Interior divisions:
- Less than 48" inclusively= divided into 3 sections
- More than 48" = divided into 4 sections

Attention: *Logiflex is not responsible for the installation of wall hutches. This responsibility belongs entirely to the distributor or the client.*

Options

Task-Light Concealer

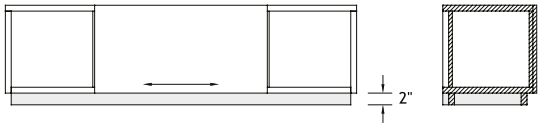

TV
$164

Task Light

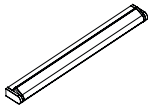

T5
DEL20
$$

Prices

Dimensions A B C	Front finish (see Appendix A for further details) Std
163615	818
164215	842
164815	865
165415	952
166015	974
166615	1024
167215	1045
167815	1071
168415	1094

How to Order

		A B C		TV	T524 T536 T548 DEL20
	LV		**SFW**		
	series	dimensions	product	task-light concealer	task light (p. 163)
Example	**LV**	164815	**SFW**	TV	

Desk Hutches

HOSB

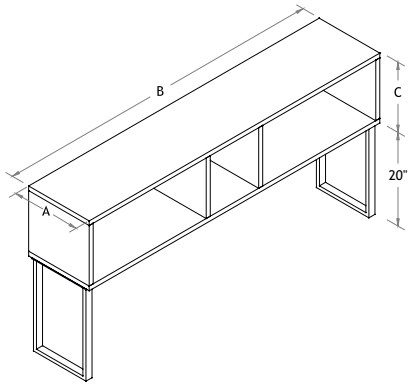

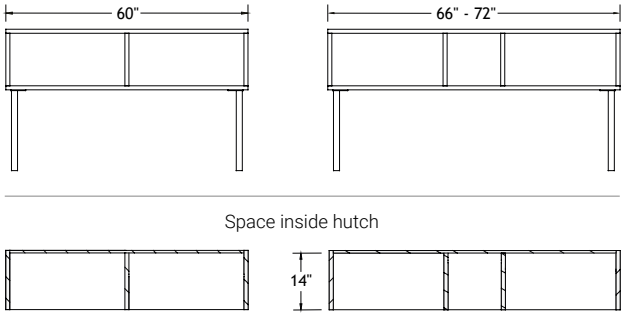

Manufacturing Standards

- Delivered disassembled;
- Open hutch;
- 20" high chrome-finish metal legs for hutch.

Note: *When ordering a divider screen that is between two metal legs, the total length is 6" shorter than the length of the hutch because of the width of the legs. The screen lengths in the adjacent 'Options' price tables have already been adjusted to fit the hutches offered on this page.*

Hutches are recessed 1/4" from surfaces they are installed on.

See Appendix A for the metal finishes available (no extra charge).

COM Fabrics*: COM Fabrics are provided by the customer. For pricing please refer GR2 grade price*

Options

Task Light

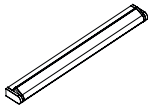

T5
DEL20
$$

Divider Screens

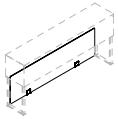

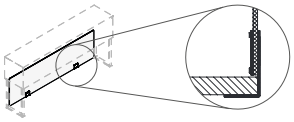

Under surface mount

UMHS - laminate - 5/8" A	B	UBHS - tackboards - 7/8" A	B	GRA	GR1	COM GR2	GR3	GR4	GR5	GR6	GR7	GR8	GR9	GR10	GR11	GR12	Leather
2060	$485	2060	$590	$626	$674	$721	$781	$840	$900	$959	$1019	$1078	$1138	$1257	$1376	$1276
2066	$494	2066	$602	$646	$706	$764	$839	$914	$988	$1062	$1137	$1211	$1284	$1434	$1582	$1458
2072	$502	2072	$622	$666	$726	$785	$860	$914	$1008	$1083	$1158	$1232	$1305	$1454	$1603	$1479

How to Order

	series	dimensions (A B C)	product	metal finish (Appx. A)	division (Appx. I)	task light (p. 163)
	LV		HOSB	WH BL SN **CHR (std)**	UMHS UBHS	T524 T536 T548 DEL20
Example	LV	156015	HOSB	CHR	UBHS	

Prices

Dimensions A	B C
156011	1266
156611	1349
157211	1375
156015	1285
156615	1386
157215	1411

Desk Hutches

ARSB

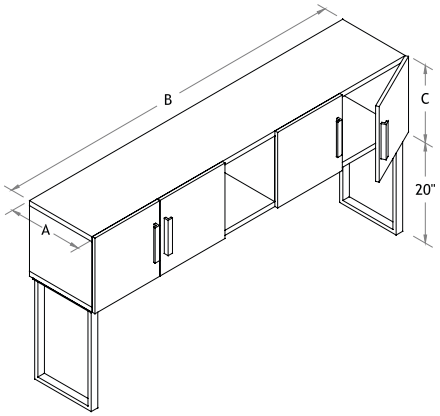

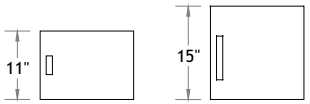

H051 handles
(see p. 149)

H052 handles
(see p. 149)

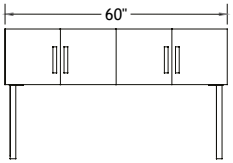

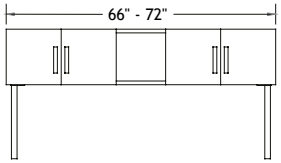

Space inside hutch

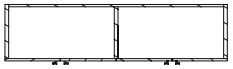

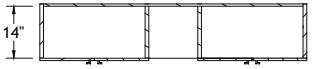

Manufacturing Standards

- Delivered disassembled;
- 4 soft close doors;
- Chrome-finish H051 metal handles on 11" high hutch doors and H052 on 15" high hutch doors;
- 20" high chrome-finish metal legs for hutch;
- Vertical wood grain on front.

Note: *When ordering a divider screen that is between two metal legs, the total length is 6" shorter than the length of the hutch because of the width of the legs. The screen lengths in the adjacent 'Options' price tables have already been adjusted to fit the hutches offered on this page.*

Hutches are recessed 1/4" from surfaces they are installed on.

Specify if different handle desired (no extra charge, see p. 149).

See Appendix A for the metal finishes available (no extra charge).

COM Fabrics*: COM Fabrics are provided by the customer. For pricing please refer GR2 grade price*

Options

Lock

LK
$47 ea.

Task Light

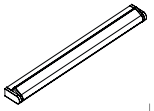

T5
DEL20
$$

Divider Screens

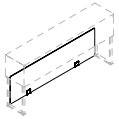

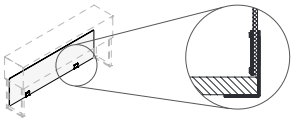

Under surface mount

UMHS - laminate - 5/8" A	B	UBHS - tackboards - 7/8" A	B	GRA	GR1	COM GR2	GR3	GR4	GR5	GR6	GR7	GR8	GR9	GR10	GR11	GR12	Leather
2060	$485	2060	$590	$626	$674	$721	$781	$840	$900	$959	$1019	$1078	$1138	$1257	$1376	$1276	
2066	$494	2066	$602	$646	$706	$764	$839	$914	$988	$1062	$1137	$1211	$1284	$1434	$1582	$1458	
2072	$502	2072	$622	$666	$726	$785	$860	$934	$1008	$1083	$1158	$1232	$1305	$1454	$1603	$1479	

How to Order

		A B C		WH BL SN **CHR (std)**	UMHS UBHS	LKBL LKSN	T524 T536 T548 DEL20
	LV		**ARSB**				
	series	dimensions	product	metal finish (Appx. A)	division (Appx. I)	lock (p. 154)	task light (p. 163)
Example	**LV**	156015	**ARSB**	CHR	UBHS	LKSN	

Prices

Dimensions A B C	Front finish (see Appendix A for further details) Std
156011	1551
156611	1667
157211	1698
156015	1640
156615	1730
157215	1763

Desk Hutches

SFSB

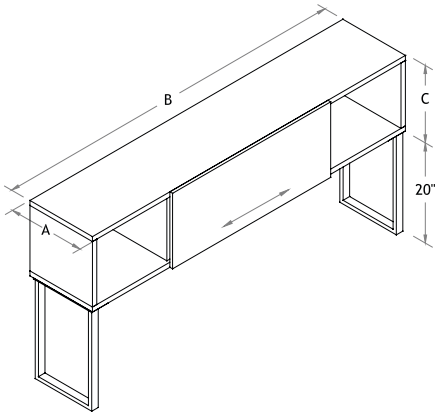

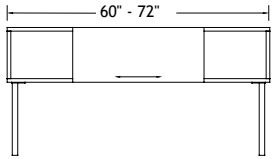

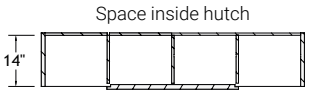

Manufacturing Standards

- Delivered disassembled;
- Open hutch with sliding front;
- 20" high chrome-finish metal legs for hutch;
- Vertical wood grain on front.

Note: *When ordering a divider screen that is between two metal legs, the total length is 6" shorter than the length of the hutch because of the width of the legs. The screen lengths in the adjacent 'Options' price tables have already been adjusted to fit the hutches offered on this page.*

Hutches are recessed 1/4" from surfaces they are installed on.

See Appendix A for the metal finishes available (no extra charge).

COM Fabrics*: COM Fabrics are provided by the customer. For pricing please refer GR2 grade price*

Options

Task Light

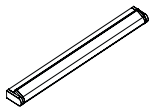

T5
DEL20
$$

Divider Screens

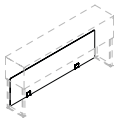

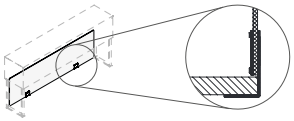

UMHS - laminate - 5/8" A	B	UBHS - tackboards - 7/8" A	B	GRA	GR1	COM GR2	GR3	GR4	GR5	GR6	GR7	GR8	GR9	GR10	GR11	GR12	Leather
2060	$485	2060	$590	$626	$674	$721	$781	$840	$900	$959	$1019	$1078	$1138	$1257	$1376	$1276
2066	$494	2066	$602	$646	$706	$764	$839	$914	$988	$1062	$1137	$1211	$1284	$1434	$1582	$1458
2072	$502	2072	$622	$666	$726	$785	$860	$934	$1008	$1083	$1158	$1232	$1305	$1454	$1603	$1479

How to Order

	series	dimensions (A B C)	product	metal finish (Appx. A)	division (Appx. I)	task light (p. 163)
	LV		SFSB	WH BL SN **CHR (std)**	UMHS UBHS	T524 T536 T548 DEL20
Example	LV	156015	SFSB	CHR	UBHS	

Prices

Dimensions A B C	Front finish (see Appendix A for further details) Std
156011	1392
156611	1427
157211	1456
156015	1432
156615	1468
157215	1501

Storage Hutches

HOSH

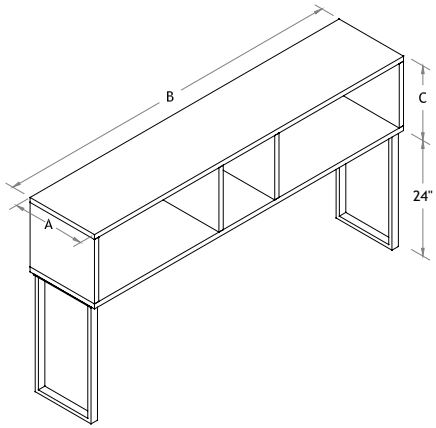

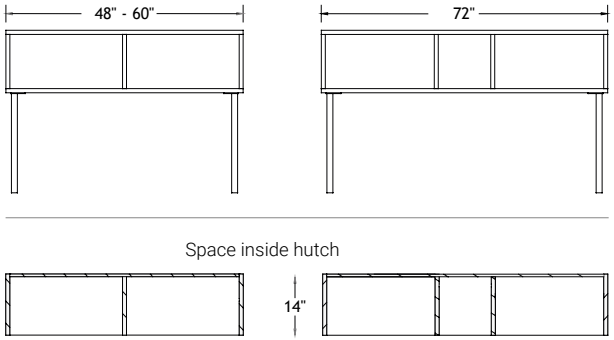

Manufacturing Standards

- Delivered disassembled;
- Open hutch;
- 24" high chrome-finish metal legs for hutch.

Note: *When ordering a divider screen that is between two metal legs, the total length is 6" shorter than the length of the hutch because of the width of the legs. The screen lengths in the adjacent 'Options' price tables have already been adjusted to fit the hutches offered on this page.*

Hutches are recessed 1/4" from surfaces they are installed on.

See Appendix A for the metal finishes available (no extra charge).

COM Fabrics*: COM Fabrics are provided by the customer. For pricing please refer GR2 grade price*

Options

Task Light

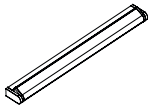

Divider Screens

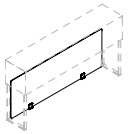

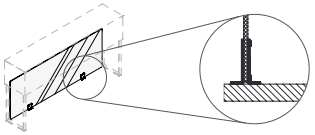

Surface mount

	SMHP - laminate - 5/8"		SBHP - tackboards - 7/8"			COM											
	A B		A B	GRA	GR1	GR2	GR3	GR4	GR5	GR6	GR7	GR8	GR9	GR10	GR11	GR12	Leather
T5	2448	$493	2448	$589	$625	$673	$720	$780	$839	$899	$958	$1018	$1077	$1137	$1256	$1375	$1275
DEL20	2460	$509	2460	$628	$673	$732	$792	$866	$941	$1015	$1089	$1164	$1238	$1312	$1462	$1609	$1486
$$	2472	$527	2472	$677	$721	$781	$840	$915	$990	$1063	$1138	$1212	$1288	$1361	$1510	$1658	$1535

How to Order

		A B C		WH BL SN **CHR (std)**	SAHP SMHP SBHP	T524 T536 T548 DEL20
	LV		**HOSH**			
	series	dimensions	product	metal finish (Appx. A)	division (Appx. I)	task light (p. 163)
Example	**LV**	156015	**HOSH**	CHR	SAHP	

Prices

Dimensions A B C	
154811	1317
156011	1396
157211	1504
154815	1340
156015	1415
157215	1543

Storage Hutches

ARSH

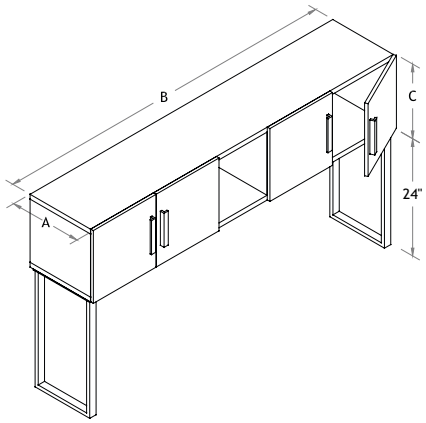

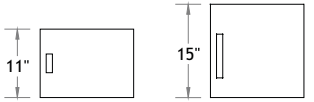

H051 handles
(see p. 149)

H052 handles
(see p. 149)

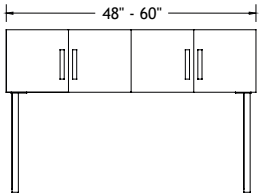

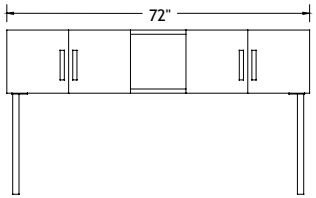

Space inside hutch

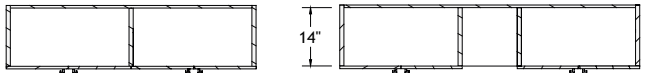

Manufacturing Standards

- Delivered disassembled;
- 4 soft close doors;
- Chrome-finish H051 metal handles on 11" high hutch doors and H052 on 15" high hutch doors;
- 24" high chrome-finish metal legs for hutch;
- Vertical wood grain.

Note: *When ordering a divider screen that is between two metal legs, the total length is 6" shorter than the length of the hutch because of the width of the legs. The screen lengths in the adjacent 'Options' price tables have already been adjusted to fit the hutches offered on this page.*

Hutches are recessed 1/4" from surfaces they are installed on.

Specify if different handle desired (no extra charge, see p. 149).

See Appendix A for the metal finishes available (no extra charge).

***COM Fabrics**: COM Fabrics are provided by the customer. For pricing please refer GR2 grade price*

Options

Lock

LK
$47 ea.

Task Light

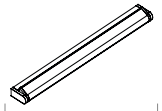

T5
DEL20
$$

Divider Screens

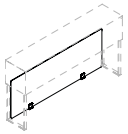

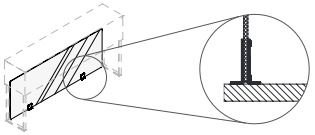

Surface mount

SMHP - laminate - 5/8" A	B	SBHP - tackboards - 7/8" A	B	GRA	GR1	COM GR2	GR3	GR4	GR5	GR6	GR7	GR8	GR9	GR10	GR11	GR12	Leather
2448	$493	2448		$589	$625	$673	$720	$780	$839	$899	$958	$1018	$1077	$1137	$1256	$1375	$1275
2460	$509	2460		$628	$673	$732	$792	$866	$941	$1015	$1089	$1164	$1238	$1312	$1462	$1609	$1486
2472	$527	2472		$677	$721	$781	$840	$915	$990	$1063	$1138	$1212	$1288	$1361	$1510	$1658	$1535

How to Order

	series	dimensions (A B C)	product	metal finish (Appx. A)	division (Appx. I)	handle (p. 149)	lock (p. 154)	task light (p. 163)
	LV		ARSH	WH BL SN **CHR (std)**	SAHP SMHP SBHP	**H052 (std)**	LKBL LKSN	T524 T536 T548 DEL20
Example	LV	156015	ARSH	CHR	SAHP	H052	LKSN	

Prices

Dimensions A B C	Front finish (see Appendix A for further details) Std
154811	1635
156011	1726
157211	1830
154815	1672
156015	1771
157215	1893

Storage Hutches

SFSH

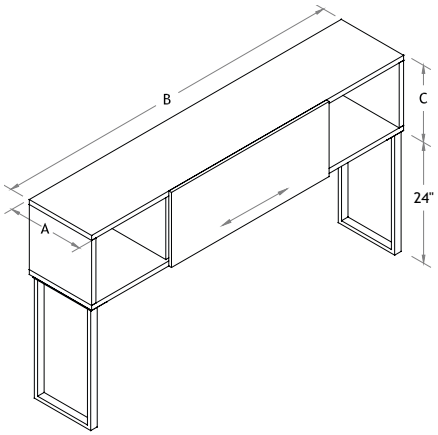

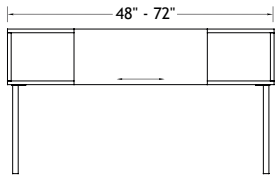

Space inside hutch

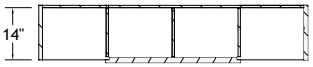

Manufacturing Standards

- Delivered disassembled;
- Hutch open on each side with sliding front;
- 24" high chrome-finish metal legs for hutch;
- Vertical wood grain on front.

Note: *When ordering a divider screen that is between two metal legs, the total length is 6" shorter than the length of the hutch because of the width of the legs. The screen lengths in the adjacent 'Options' price tables have already been adjusted to fit the hutches offered on this page.*

Hutches are recessed 1/4" from surfaces they are installed on.

See Appendix A for the metal finishes available (no extra charge).

COM Fabrics*: COM Fabrics are provided by the customer. For pricing please refer GR2 grade price*

Options

Task Light

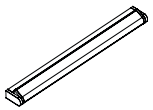

T5
DEL20
$$

Divider Screens

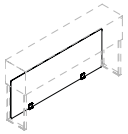

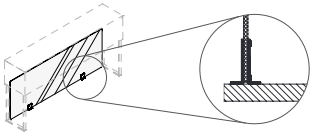

Surface mount

SMHP - laminate - 5/8" A	B	SBHP - tackboards - 7/8" A	B	GRA	GR1	COM GR2	GR3	GR4	GR5	GR6	GR7	GR8	GR9	GR10	GR11	GR12	Leather
2448	$493	2448	$589	$625	$673	$720	$780	$839	$899	$958	$1018	$1077	$1137	$1256	$1375	$1275
2460	$509	2460	$628	$673	$732	$792	$866	$941	$1015	$1089	$1164	$1238	$1312	$1462	$1609	$1486
2472	$527	2472	$677	$721	$781	$840	$915	$990	$1063	$1138	$1212	$1288	$1361	$1510	$1658	$1535

How to Order

		A B C		WH BL SN **CHR (std)**	SAHP SMHP SBHP	T524 T536 T548 DEL20
	LV		**SFSH**			
	series	dimensions	product	metal finish (Appx. A)	division (Appx. I)	task light (p. 163)
Example	**LV**	156015	**SFSH**	CHR	SAHP	

Prices

Dimensions A B C	Front finish (see Appendix A for further details) Std
154811	1433
156011	1523
157211	1588
154815	1468
156015	1564
157215	1636

Shared Desk Hutches

HODB

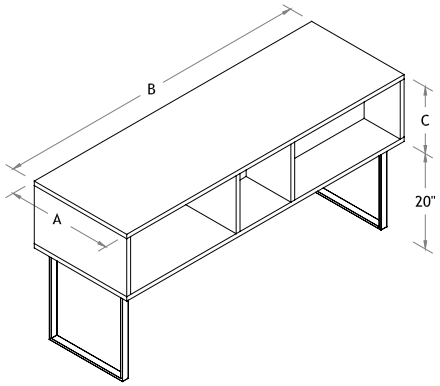

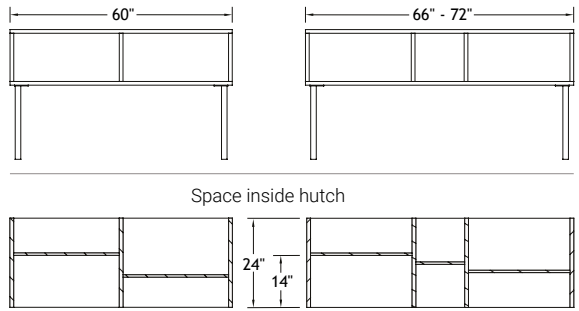

Manufacturing Standards

- Delivered disassembled;
- Hutch open on each side;
- 20" high chrome-finish metal legs for hutch.

Note: *When ordering a divider screen that is between two metal legs, the total length is 6" shorter than the length of the hutch because of the width of the legs. The screen lengths in the adjacent 'Options' price tables have already been adjusted to fit the hutches offered on this page.*

See Appendix A for the metal finishes available (no extra charge).

COM Fabrics*: COM Fabrics are provided by the customer. For pricing please refer GR2 grade price*

Options

Task Light
(2 units)

T5
DEL20
$$

Divider Screens

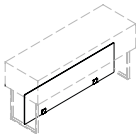

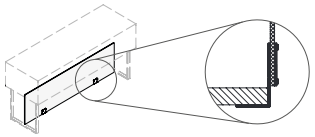

Under surface mount

UMHS - laminate - 5/8" A	B	UBHS - tackboards - 7/8" A	B	GRA	GR1	COM GR2	GR3	GR4	GR5	GR6	GR7	GR8	GR9	GR10	GR11	GR12	Leather
2060	$485	2060		$590	$626	$674	$721	$781	$840	$900	$959	$1019	$1078	$1138	$1257	$1376	$1276
2066	$494	2066		$602	$646	$706	$764	$839	$914	$988	$1062	$1137	$1211	$1284	$1434	$1582	$1458
2072	$502	2072		$622	$666	$726	$785	$860	$914	$1008	$1083	$1158	$1232	$1305	$1454	$1603	$1479

How to Order

		A B C		WH BL SN **CHR (std)**	UMHS UBHS	T524 T536 T548 DEL20
	LV		**HODB**			
	series	dimensions	product	metal finish (Appx. A)	division (Appx. I)	2 task lights (p. 163)
Example	**LV**	246011	**HODB**	CHR	UAHS	

Prices

Dimensions A	B C
246011	1489
246611	1574
247211	1597
246015	1509
246615	1613
247215	1637

Shared Desk Hutches

ARDB

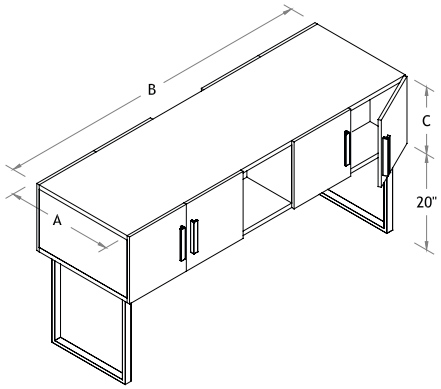

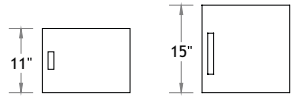

H051 handles
(see p. 149)

H052 handles
(see p. 149)

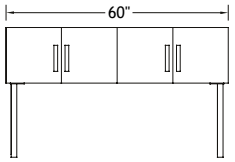

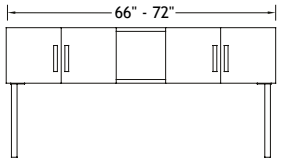

Space inside hutch

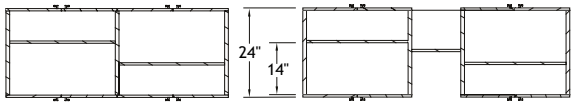

Manufacturing Standards

- Delivered disassembled;
- Cabinets on each side with 4 soft close doors;
- Chrome-finish H051 metal handles on 11" high hutch doors and H052 on 15" high hutch doors;
- 20" high chrome-finish metal legs for hutch;
- Vertical wood grain on front.

Note: *When ordering a divider screen that is between two metal legs, the total length is 6" shorter than the length of the hutch because of the width of the legs. The screen lengths in the adjacent 'Options' price tables have already been adjusted to fit the hutches offered on this page.*

Specify if different handle desired (no extra charge, see p. 149).

See Appendix A for the metal finishes available (no extra charge).

COM Fabrics*: COM Fabrics are provided by the customer. For pricing please refer GR2 grade price*

Options

Lock

LK
$47 ea.

Task Light
(2 units)

T5
DEL20
$$

Divider Screens

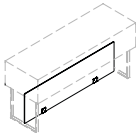

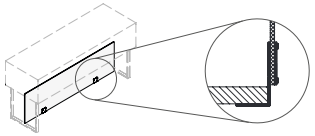

Under surface mount

UMHS - laminate - 5/8" A	B	UBHS - tackboards - 7/8" A	B	GRA	GR1	COM GR2	GR3	GR4	GR5	GR6	GR7	GR8	GR9	GR10	GR11	GR12	Leather
2060	$485	2060	$590	$626	$674	$721	$781	$840	$900	$959	$1019	$1078	$1138	$1257	$1376	$1276
2066	$494	2066	$602	$646	$706	$764	$839	$914	$988	$1062	$1137	$1211	$1284	$1434	$1582	$1458
2072	$502	2072	$622	$666	$726	$785	$860	$934	$1008	$1083	$1158	$1232	$1305	$1454	$1603	$1479

How to Order

		A B C		WH BL SN **CHR (std)**	UMHS UBHS	LKBL LKSN	T524 T536 T548 DEL20
	LV		**ARDB**				
	series	dimensions	product	metal finish (Appx. A)	division (Appx. I)	lock (p. 154)	2 task lights (p. 163)
Example	**LV**	246011	**ARDB**	CHR	UBHS	LKSN	

Prices

Dimensions A B C	Front finish (see Appendix A for further details) Std
246011	2206
246611	2279
247211	2310
246015	2250
246615	2340
247215	2375

Shared Desk Hutches

SFDB

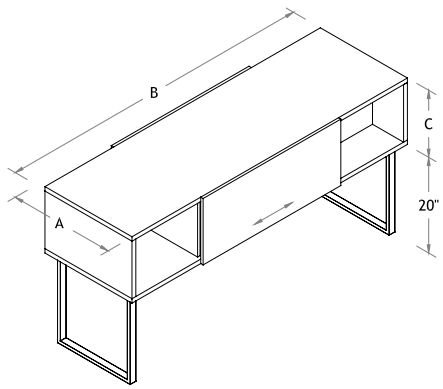

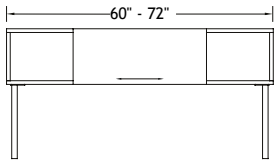

Space inside hutch

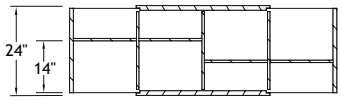

Manufacturing Standards

- Delivered disassembled;
- Open hutch on each side with sliding front;
- 20" high chrome-finish metal legs for hutch;
- Vertical wood grain on front.

Note: *When ordering a divider screen that is between two metal legs, the total length is 6" shorter than the length of the hutch because of the width of the legs. The screen lengths in the adjacent 'Options' price tables have already been adjusted to fit the hutches offered on this page.*

See Appendix A for the metal finishes available (no extra charge).

COM Fabrics*: COM Fabrics are provided by the customer. For pricing please refer GR2 grade price*

Options

Task Light
(2 units)

T5
DEL20
$$

Divider Screens

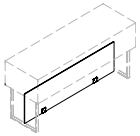

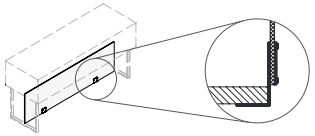

Under surface mount

UMHS - laminate - 5/8" A	B	UBHS - tackboards - 7/8" A	B	GRA	GR1	COM GR2	GR3	GR4	GR5	GR6	GR7	GR8	GR9	GR10	GR11	GR12	Leather
2060	$485	2060		$590	$626	$674	$721	$781	$840	$900	$959	$1019	$1078	$1138	$1257	$1376	$1276
2066	$494	2066		$602	$646	$706	$764	$839	$914	$988	$1062	$1137	$1211	$1284	$1434	$1582	$1458
2072	$502	2072		$622	$666	$726	$785	$860	$914	$1008	$1083	$1158	$1232	$1305	$1454	$1603	$1479

How to Order

		A B C		WH BL SN **CHR (std)**	UMHS UBHS	T524 T536 T548 DEL20
	LV		**SFDB**			
	series	dimensions	product	metal finish (Appx. A)	division (Appx. I)	2 task lights (p. 163)
Example	**LV**	246011	**SFDB**	CHR	UBHS	

Prices

Dimensions A B C	Front finish (see Appendix A for further details) Std
246011	2020
246611	2050
247211	2082
246015	2072
246615	2109
247215	2142

Shared Storage Hutches

HODH

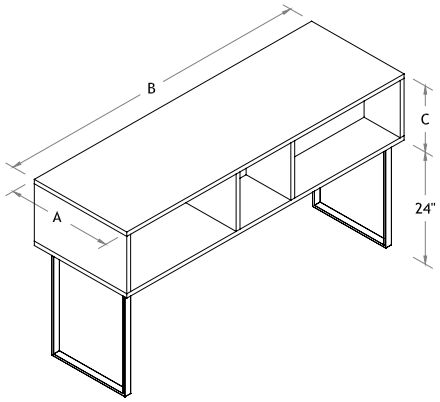

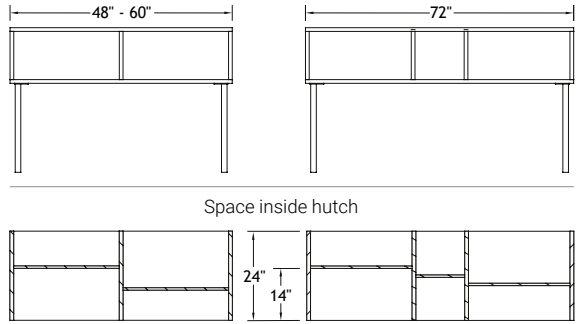

Manufacturing Standards

- Delivered disassembled;
- Hutch open on each side;
- 24" high chrome-finish metal legs for hutch.

Note: *When ordering a divider screen that is between two metal legs, the total length is 6" shorter than the length of the hutch because of the width of the legs. The screen lengths in the adjacent 'Options' price tables have already been adjusted to fit the hutches offered on this page.*

See Appendix A for the metal finishes available (no extra charge).

COM Fabrics*: COM Fabrics are provided by the customer. For pricing please refer GR2 grade price*

Options

Task Light
(2 units)

T5
DEL20
$$

Divider Screens

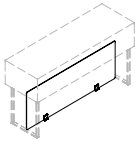

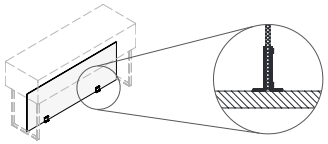

Surface mount

SMHP - laminate - 5/8" A	B	SBHP - tackboards - 7/8" A	B	GRA	GR1	COM GR2	GR3	GR4	GR5	GR6	GR7	GR8	GR9	GR10	GR11	GR12	Leather
2448	$493	2448		$589	$625	$673	$720	$780	$839	$899	$958	$1018	$1077	$1137	$1256	$1375	$1275
2460	$509	2460		$628	$673	$732	$792	$866	$941	$1015	$1089	$1164	$1238	$1312	$1462	$1609	$1486
2472	$527	2472		$677	$721	$781	$840	$915	$990	$1063	$1138	$1212	$1288	$1361	$1510	$1658	$1535

How to Order

		A B C		WH BL SN **CHR (std)**	SAHP SMHP SBHP	T524 T536 T548 DEL20
	LV		**HODH**			
	series	dimensions	product	metal finish (Appx. A)	division (Appx. I)	2 task lights (p. 163)
Example	**LV**	244815	**HODH**	CHR	SAHP	

Prices

Dimensions A	B	C
244811	1544	
246011	1620	
247211	1729	
244815	1563	
246015	1641	
247215	1767	

Shared Storage Hutches

ARDH

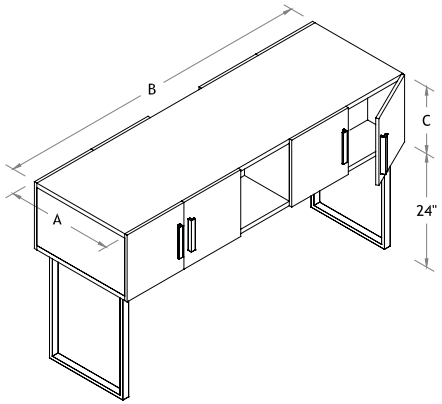

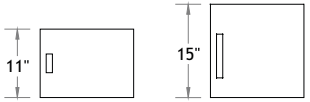

H051 handles (see p. 149)

H052 handles (see p. 149)

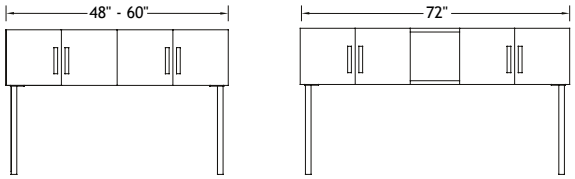

Space inside hutch

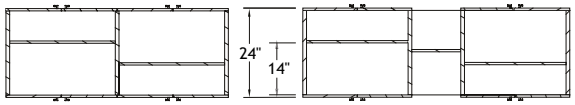

Manufacturing Standards

- Delivered disassembled;
- Cabinets on each side with 4 soft close doors;
- Chrome-finish H051 metal handles on 11" high hutch doors and H052 on 15" high hutch doors;
- 24" high chrome-finish metal legs for hutch;
- Vertical wood grain.

Note: *When ordering a divider screen that is between two metal legs, the total length is 6" shorter than the length of the hutch because of the width of the legs. The screen lengths in the adjacent 'Options' price tables have already been adjusted to fit the hutches offered on this page.*

Specify if different handle desired (no extra charge, see p. 149).

See Appendix A for the metal finishes available (no extra charge).

COM Fabrics*: COM Fabrics are provided by the customer. For pricing please refer GR2 grade price*

Options

Lock

LK
$47 ea.

Task Light
(2 units)

T5
DEL20
$$

Divider Screens

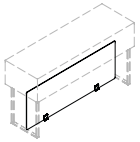

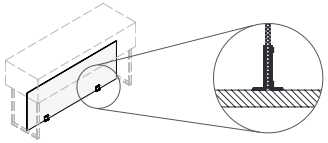

Surface mount

SMHP - laminate - 5/8" A	B	SBHP - tackboards - 7/8" A	B	GRA	GR1	COM GR2	GR3	GR4	GR5	GR6	GR7	GR8	GR9	GR10	GR11	GR12	Leather
2448	$493	2448	$589	$625	$673	$720	$780	$839	$899	$958	$1018	$1077	$1137	$1256	$1375	$1275
2460	$509	2460	$628	$673	$732	$792	$866	$941	$1015	$1089	$1164	$1238	$1312	$1462	$1609	$1486
2472	$527	2472	$677	$721	$781	$840	$915	$990	$1063	$1138	$1212	$1288	$1361	$1510	$1658	$1535

How to Order

		A B C		WH BL SN **CHR (std)**	SAHP SMHP SBHP	**H052 (std)**	LKBL LKSN	T524 T536 T548 DEL20
	LV		**ARDH**					
	series	dimensions	product	metal finish (Appx. A)	division (Appx. I)	handle (p. 149)	lock (p. 154)	2 task lights (p. 163)
Example	**LV**	244815	**ARDH**	CHR	SAHP	H052	LKSN	

Prices

Dimensions A B C	Front finish (see Appendix A for further details) Std
244811	2244
246011	2337
247211	2443
244815	2286
246015	2382
247215	2506

Shared Storage Hutches

SFDH

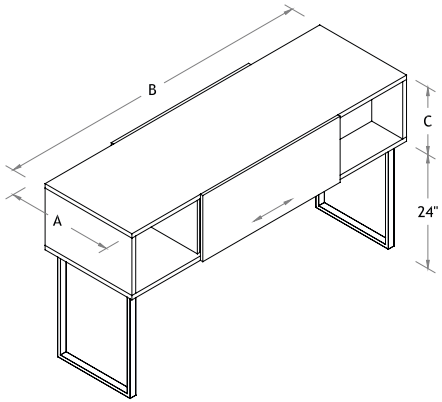

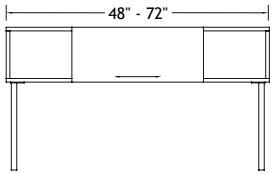

Space inside hutch

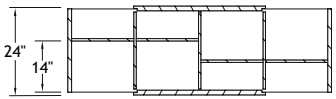

Manufacturing Standards

- Delivered disassembled;
- Open hutch on each side with sliding front;
- 24" high chrome-finish metal legs for hutch;
- Vertical wood grain on front.

Note: *When ordering a divider screen that is between two metal legs, the total length is 6" shorter than the length of the hutch because of the width of the legs. The screen lengths in the adjacent 'Options' price tables have already been adjusted to fit the hutches offered on this page.*

See Appendix A for the metal finishes available (no extra charge).

COM Fabrics*: COM Fabrics are provided by the customer. For pricing please refer GR2 grade price*

Options

Task Light
(2 units)

T5
DEL20
$$

Divider Screens

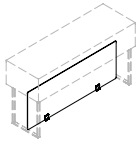

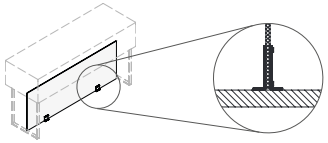

Surface mount

SMHP - laminate - 5/8" A	B	SBHP - tackboards - 7/8" A	B	GRA	GR1	COM GR2	GR3	GR4	GR5	GR6	GR7	GR8	GR9	GR10	GR11	GR12	Leather
2448	$493	2448		$589	$625	$673	$720	$780	$839	$899	$958	$1018	$1077	$1137	$1256	$1375	$1275
2460	$509	2460		$628	$673	$732	$792	$866	$941	$1015	$1089	$1164	$1238	$1312	$1462	$1609	$1486
2472	$527	2472		$677	$721	$781	$840	$915	$990	$1063	$1138	$1212	$1288	$1361	$1510	$1658	$1535

How to Order

		A B C		WH BL SN **CHR (std)**	SAHP SMHP SBHP	T524 T536 T548 DEL20
	LV		**SFDH**			
	series	dimensions	product	metal finish (Appx. A)	division (Appx. I)	2 task lights (p. 163)
Example	**LV**	244815	**SFDH**	CHR	SAHP	

Prices

Dimensions A B C	Front finish (see Appendix A for further details) Std
244811	2058
246011	2149
247211	2210
244815	2109
246015	2206
247215	2273

Collaborative Furniture

Collaborative and Multimedia Tables

MP

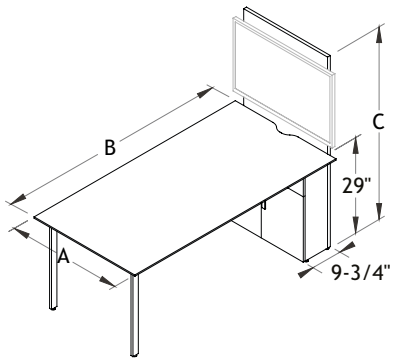

Combination of Colors

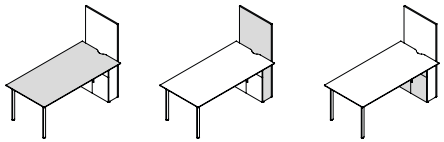

Top **Base** **Front**

Manufacturing Standards

- Delivered disassembled;
- Rectangular top with knife edge;
- 2 chrome-finish metal legs, 29" H;
- Surface cutout for wire management;
- Storage cabinet with 2 soft close doors under the top with 1 adjustable shelf and chrome finish H052 handles;
- Built-in 1" laminate vertical panel to mount a screen;
- Grommet hole in the base of the unit to manage screen cables;
- Vertical wood grain on front.

Dimension "B" includes the 1" vertical panel.

Screen and screen mounting hardware not included. Maximum recommended screen size 60".

Handle: *For a handle other than* H052 *standard, please choose from the Logiflex list at no extra charge.,see* *p. 149**).*

Options

Lock

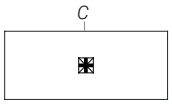

Connectivity

Wireless charger

LK
$47 ea.

MH3
A $434 | B/C $434 | D $434

MH1
$740

CQIBL $128 | CQIWH $128

Prices

Dimensions A	B	C
305559		1529
306159		1574
306759		1619
307359		1663
365559		1643
366159		1698
366759		1749
367359		1803

How to Order

		A B C		WH BL SN **CHR (std)**	MH1/MH1B MH3 B/C/D	CQIBL CQIWH	LKBL LKSN	
	LV		**MP**					
	series	dimensions	product	metal finish (Appx. A)	connectivity	CQi (Appx. B)	lock (p. 154)	handle (p. 149)
Example	**LV**	366159	**MP**	CHR	MH3B	QIBL	LKSN	

Collaborative and Multimedia Tables

MT

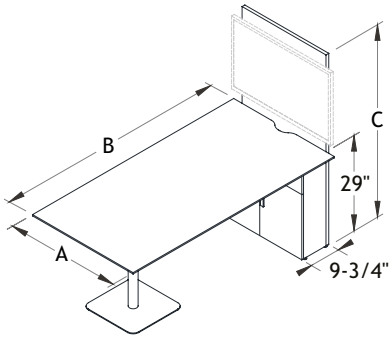

Combination of Colors

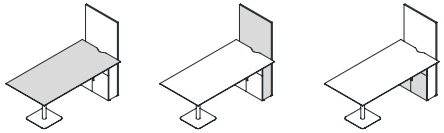

Top **Base** **Front**

Manufacturing Standards

- Delivered disassembled;
- Rectangular top with knife edge and square satin nickel finish Lennox metal base, 29" H;
- Surface cutout for wire management;
- Storage cabinet with 2 soft close doors under the top with 1 adjustable shelf and satin nickel finish H052 handles;
- Built-in 1" laminate vertical panel to mount a screen;
- Grommet hole in the base of the unit to manage screen cables;
- Vertical wood grain on front and on vertical panel.

Dimension "B" includes the 1" vertical panel.

Screen and screen mounting hardware not included. Maximum recommended screen size 60".

Handle: *For a handle other than* H052 *standard, please choose from the Logiflex list at no extra charge.,see* *p. 149**).*

Options

Lock

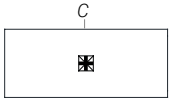

Connectivity

Wireless charger

LK
$47 ea.

MH3
A $434 | B/C $434 | D $434

MH1
$740

CQIBL $128 | CQIWH $128

Prices

Dimensions A B C	SN/BL/WH	CHR
305559	1848	2724
306159	1891	2771
306759	1936	2814
307359	1982	2859
365559	1961	2839
366159	2014	2890
366759	2068	2946
367359	2121	2997

How to Order

		A B C		WH BL CHR **SN (std)**	MH1/MH1B MH3 B/C/D	CQIBL CQIWH	LKBL LKSN	
	LV		**MT**					
	series	dimensions	product	metal finish (Appx. A)	connectivity	CQi (Appx. B)	lock (p. 154)	handle (p. 149)
Example	**LV**	366159	**MT**	SN	MH3B	QIBL	LKSN	

Collaborative and Multimedia Tables

MB

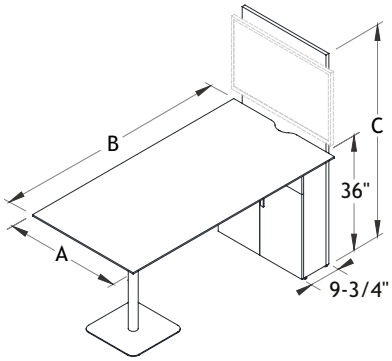

Combination of Colors

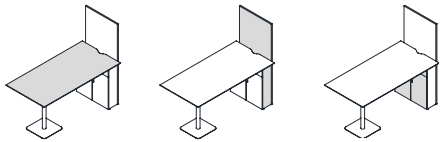

Top **Base** **Front**

Manufacturing Standards

- Delivered disassembled;
- Rectangular top with knife edge and square satin nickel finish Lennox metal base, 36" H;
- Surface cutout for wire management;
- Storage cabinet with 2 soft close doors under the top with 2 adjustable shelves and satin nickel finish H052 handles;
- Built-in 1" laminate vertical panel to mount a screen;
- Grommet hole in the base of the unit to manage screen cables;
- Vertical wood grain on front and on vertical panel.

Dimension "B" includes the 1" vertical panel.

Screen and screen mounting hardware not included. Maximum recommended screen size 60".

Handle: *For a handle other than* H052 *standard, please choose from the Logiflex list at no extra charge.,see* *p. 149**).*

Options

Lock

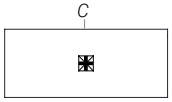

Connectivity

Wireless charger

LK
$47 ea.

MH3
A $434 | B/C $434 | D $434

MH1
$740

CQIBL $128 | CQIWH $128

Prices

Dimensions A B C	SN/BL/WH	CHR
305566	1882	2809
306166	1926	2854
306766	1971	2898
307366	2019	2944
365566	1998	2925
366166	2052	2982
366766	2106	3032
367366	2161	3085

How to Order

		A B C		WH BL CHR **SN (std)**	MH1/MH1B MH3 B/C/D	CQIBL CQIWH	LKBL LKSN	
	LV		**MB**					
	series	dimensions	product	metal finish (Appx. A)	connectivity	CQi (Appx. B)	lock (p. 154)	handle (p. 149)
Example	**LV**	367366	**MB**	SN	MH3B	QIBL	LKSN	

Collaborative and Multimedia Tables

MG

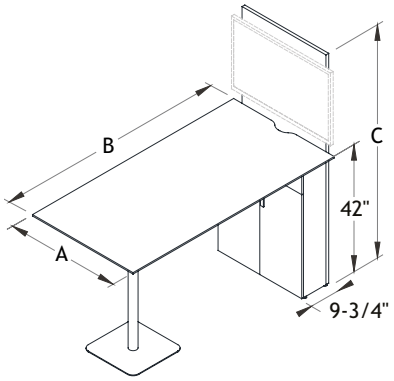

Combination of Colors

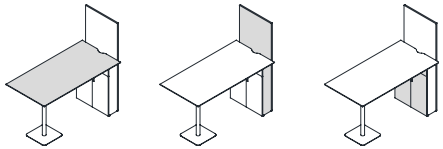

Top **Base** **Front**

Manufacturing Standards

- Delivered disassembled;
- Rectangular top with knife edge and square satin nickel finish Lennox metal base, 42" H;
- Surface cutout for wire management;
- Storage cabinet with 2 soft close doors under the top with 2 adjustable shelves and satin nickel finish H052 handles;
- Built-in 1" laminate vertical panel to mount a screen;
- Grommet hole in the base of the unit to manage screen cables;
- Vertical wood grain on front and on vertical panel.

Dimension "B" includes the 1" vertical panel.

Screen and screen mounting hardware not included. Maximum recommended screen size 60".

Handle: *For a handle other than* H052 *standard, please choose from the Logiflex list at no extra charge.,see* *p. 149**).*

Options

Lock

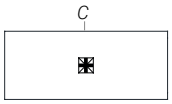

Connectivity

Wireless charger

LK
$47 ea.

MH3
A $434 | B/C $434 | D $434

MH1
$740

CQIBL $128 | CQIWH $128

Prices

Dimensions A B C	SN/BL/WH	CHR
305572	1912	2871
306172	1958	2916
306772	2001	2960
307372	2048	3007
365572	2031	2993
366172	2088	3048
366772	2139	3098
367372	2193	3155

How to Order

	series	dimensions (A B C)	product	WH BL CHR **SN (std)**	connectivity (MH1/MH1B MH3 B/C/D)	CQi (Appx. B) (CQIBL CQIWH)	lock (p. 154) (LKBL LKSN)	handle (p. 149)
	LV		**MG**					
Example	**LV**	307372	**MG**	SN	MH3B	QIBL	LKSN	

Divider Screens

Acrylic

UAS

Under surface mount

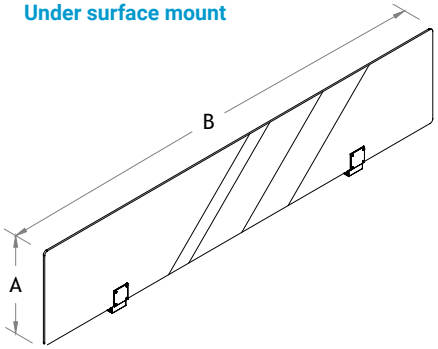

Manufacturing Standards

- Acrylic divider screen, frosted finish (PL), to be installed above a surface;
- 2 chrome-finish metal mounts for mounting under a surface.

C1: Acrylic 1/4"

Dimension "B" is 1/2" recessed.

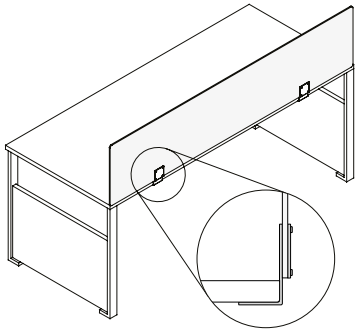

Mounting Fixture
Side View

Prices

Dimensions A B	C1
1524	375
1530	398
1536	420
1542	441
1548	467
1554	487
1556	501
1560	509
1564	524
1566	533
1568	545
1572	557

How to Order

		A B		C1	WH BL SN **CHR (std)**	**PL (std)**
	LV		**UAS**			
	series	dimensions	product	acrylic thickness	metal finish (Appx. A)	acrylic finish (Appx. A)
Example	**LV**	1572	**UAS**	C1	CHR	PL

Acrylic

UAC

Under surface mount

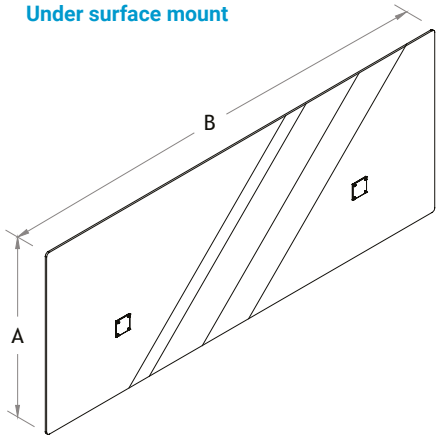

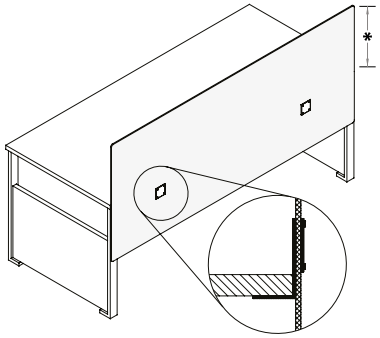

Mounting Fixture
Side View

Manufacturing Standards

- Acrylic divider screen, frosted finish (PL), to position in front of the surface;
- 2 chrome-finish metal mounts for mounting under a surface.

**Screen height above surface: 24"H = 13" / 26"H = 15"*

C1: Acrylic 1/4"

Dimension "B" is 1/2" recessed.

Prices

Dimensions A B	C1
2424	428
2430	467
2436	502
2442	539
2448	574
2454	611
2456	628
2460	646
2464	666
2466	684
2468	701
2472	720
2624	439
2630	481
2636	521
2642	561
2648	598
2654	637
2656	660
2660	678
2664	697
2666	717
2668	740
2672	756

How to Order

		A B		C1	WH BL SN **CHR (std)**	**PL (std)**
	LV		**UAC**			
	series	dimensions	product	acrylic thickness	metal finish (Appx. A)	acrylic finish (Appx. A)
Example	**LV**	2672	**UAC**	C1	CHR	PL

Acrylic

UAM

Under surface mount

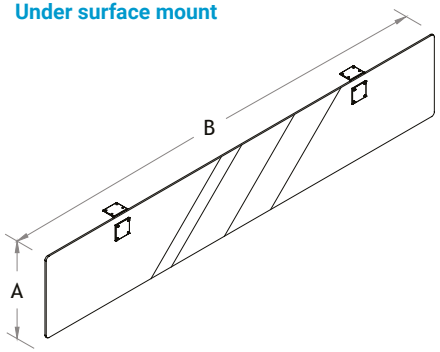

Manufacturing Standards

- Acrylic divider screen, frosted finish (PL), to be installed under a surface;
- 2 chrome-finish metal mounts for mounting under a surface.

C1: Acrylic 1/4"

Note: *When ordering a divider screen that serves as a modesty, you must order a screen whose length is 6" shorter than the desk because of the width of the legs, ex: for a 66" desk order a 60" screen. The specifier must ensure compatibility between the modesty divider screen and the desk's legs.*

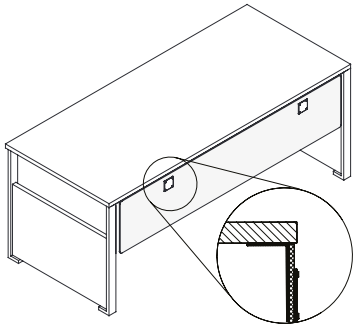

Mounting Fixture
Side View

Prices

Dimensions A B	C1
1024	344
1030	358
1036	375
1042	390
1048	405
1054	420
1056	427
1060	435
1064	441
1066	450
1068	457
1072	467

How to Order

		A B		C1	WH BL SN **CHR (std)**	**PL (std)**
	LV		**UAM**			
	series	dimensions	product	acrylic thickness	metal finish (Appx. A)	acrylic finish (Appx. A)
Example	**LV**	1072	**UAM**	C1	CHR	PL

Acrylic

SAS

Surface mount

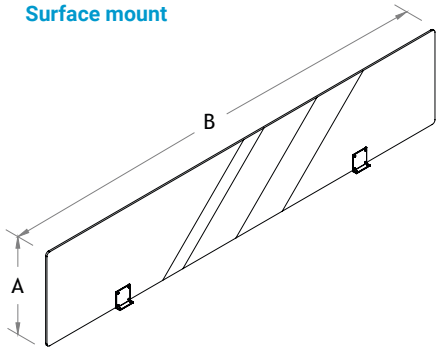

Manufacturing Standards

- Acrylic divider screen, frosted finish (PL), to be installed above a surface;
- 2 chrome-finish metal mounts for mounting on a surface.

C1: Acrylic 1/4"

Dimension "B" is 1/2" recessed.

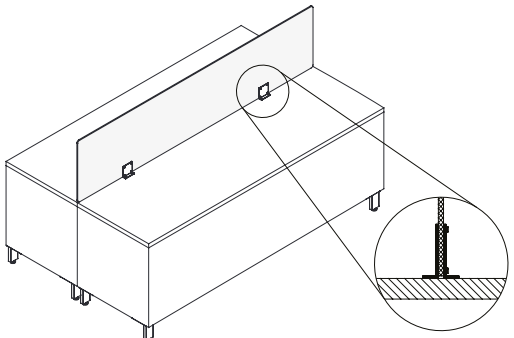

Mounting Fixture
Side View

Prices

Dimensions A B	C1
1524	385
1530	407
1536	430
1542	452
1548	476
1554	499
1556	509
1560	522
1564	533
1566	544
1568	555
1572	567

How to Order

		A B		C1	WH BL SN **CHR (std)**	**PL (std)**
	LV		**SAS**			
	series	dimensions	product	acrylic thickness	metal finish (Appx. A)	acrylic finish (Appx. A)
Example	**LV**	1572	**SAS**	C1	CHR	PL

Laminate

UMS

Under surface mount

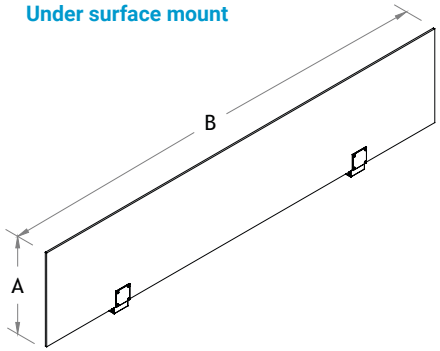

Manufacturing Standards

- 5/8" laminate divider screen to be installed above a surface;
- 2 chrome-finish metal mounts for mounting under a surface.

Dimension "B" is 1/2" recessed.

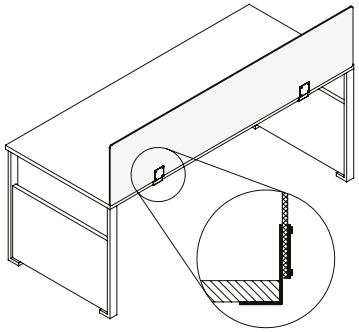

Mounting Fixture
Side View

Prices

Dimensions A	B
1524	444
1530	449
1536	454
1542	459
1548	468
1554	473
1556	476
1560	478
1564	481
1566	483
1568	485
1572	490
2124	451
2130	458
2136	469
2142	476
2148	482
2154	490
2156	494
2160	497
2164	502
2166	504
2168	507
2172	510

How to Order

		A B		WH BL SN **CHR (std)**
	LV		**UMS**	
	series	dimensions	product	metal finish (Appx. A)
Example	**LV**	1572	**UMS**	CHR

Laminate

UMM

Under surface mount

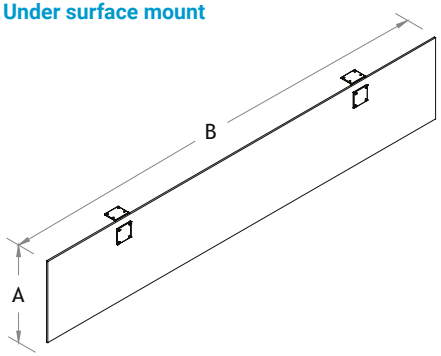

Manufacturing Standards

- 5/8" laminate divider screen to be installed under a surface;
- 2 chrome-finish metal mounts for mounting under a surface.

Dimension "B" is 1/2" recessed.

Note: *When ordering a divider screen that serves as a modesty, you must order a screen whose length is 6" shorter than the desk because of the width of the legs, ex: for a 66" desk order a 60" screen.*

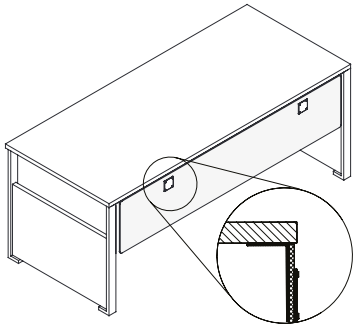

Mounting Fixture
Side View

Prices

Dimensions A	B
1024	436
1030	439
1036	447
1042	449
1048	452
1054	457
1056	459
1060	460
1064	462
1066	468
1068	471
1072	472

How to Order

		A B		WH BL SN **CHR (std)**
	LV		**UMM**	
	series	dimensions	product	metal finish (Appx. A)
Example	**LV**	1072	**UMM**	CHR

Laminate

SMS

Surface mount

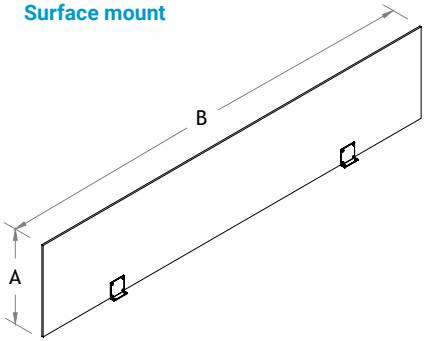

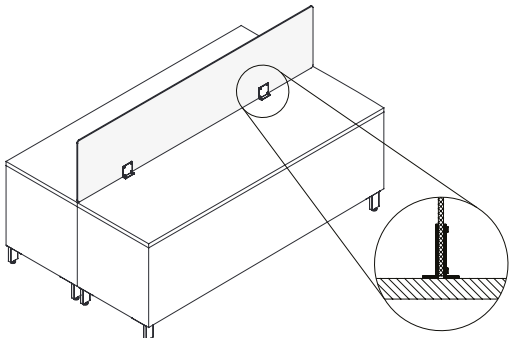

Mounting Fixture
Side View

Manufacturing Standards

- 5/8" laminate divider screen to be installed above a surface;
- 2 chrome-finish metal mounts for mounting on a surface.

Dimension "B" is 1/2" recessed.

Prices

Dimensions A	B
1524	454
1530	459
1536	468
1542	473
1548	478
1554	483
1556	485
1560	490
1564	493
1566	496
1568	499
1572	502
2124	462
2130	472
2136	478
2142	485
2148	494
2154	502
2156	505
2160	507
2164	514
2166	519
2168	522
2172	525

How to Order

		A B		WH BL SN **CHR (std)**
	LV		**SMS**	
	series	dimensions	product	metal finish (Appx. A)
Example	**LV**	1572	**SMS**	CHR

Tackboards

UBS

Under surface mount

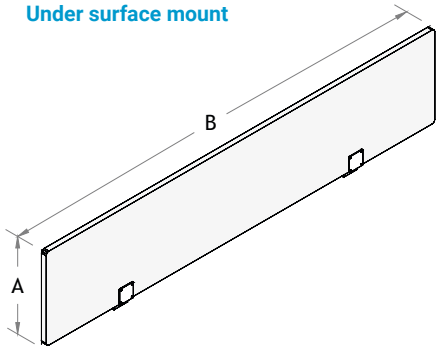

Manufacturing Standards

- 7/8" thick tackboard covered with fabric to be installed above a surface;
- 2 chrome-finish metal mounts for mounting under a surface.

Dimension "B" is 1/2" recessed.

COM Fabrics: *COM Fabrics are provided by the customer. For pricing please refer GR2 grade price.*

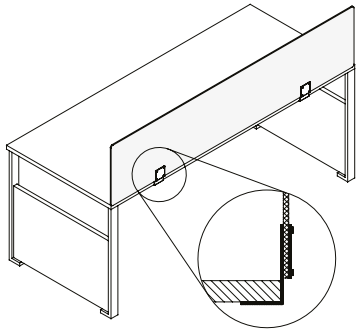

Mounting Fixture
Side View

Prices

Dimensions A B	GRA	GR1	GR2	GR3	GR4	GR5	GR6	GR7	GR8	GR9	GR10	GR11	GR12	leather cuir
1524	483	502	525	549	580	609	640	668	698	728	758	818	878	827
1530	488	515	550	586	630	676	720	764	809	855	899	988	1077	1002
1536	504	531	567	603	647	692	736	781	825	870	915	1003	1094	1019
1542	521	548	584	620	664	710	754	798	843	888	932	1021	1110	1036
1548	525	561	609	656	716	776	835	894	954	1014	1073	1192	1311	1211
1554	542	578	625	673	732	792	851	911	970	1030	1089	1208	1327	1228
1556	550	586	633	682	741	800	860	920	979	1038	1098	1216	1336	1236
1560	558	593	642	689	749	808	867	927	987	1045	1105	1225	1343	1244
1564	562	600	648	695	755	815	873	933	993	1053	1111	1231	1349	1250
1566	564	607	666	726	800	874	949	1023	1098	1172	1246	1396	1543	1420
1568	571	615	675	734	809	884	957	1032	1106	1181	1255	1404	1552	1429
1572	581	625	685	744	819	893	967	1041	1117	1191	1264	1413	1561	1439

How to Order

		A B		WH BL SN **CHR (std)**
	LV		**UBS**	
	series	dimensions	product	metal finish (Appx. A)
Example	**LV**	1572	**UBS**	CHR

Tackboards

UBC

Under surface mount

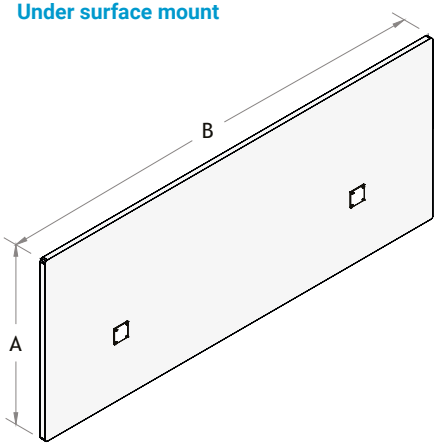

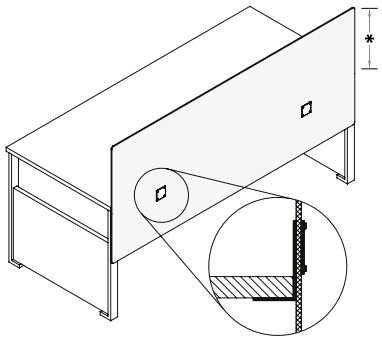

Mounting Fixture
Side View

Manufacturing Standards

- 7/8" thick tackboard covered with fabric to position in front of the surface;
- 2 chrome-finish metal mounts for mounting on a surface.

**Screen height above surface: 24"H = 13" / 26"H = 15"*

Dimension "B" is 1/2" recessed.

Applicable only on single desks.

COM Fabrics: *COM Fabrics are provided by the customer. For pricing please refer GR2 grade price.*

Prices

Dimensions A B	GRA	GR1	GR2	GR3	GR4	GR5	GR6	GR7	GR8	GR9	GR10	GR11	GR12	leather cuir
2424	519	538	561	585	615	645	675	705	734	763	794	853	913	863
2430	538	564	600	636	680	726	770	815	859	904	949	1037	1127	1053
2436	561	588	624	660	705	750	794	838	883	928	972	1061	1151	1076
2442	584	611	647	683	727	773	817	861	905	951	995	1084	1173	1099
2448	604	640	687	734	794	853	913	972	1032	1091	1151	1270	1388	1290
2454	627	663	711	758	818	878	936	996	1056	1115	1174	1294	1412	1313
2456	640	675	722	770	829	889	949	1008	1067	1127	1187	1305	1424	1325
2460	652	688	735	783	843	902	961	1021	1080	1140	1199	1318	1437	1338
2464	664	699	748	795	855	914	973	1033	1093	1152	1211	1331	1449	1349
2466	668	713	773	831	906	981	1055	1129	1204	1278	1352	1501	1649	1526
2468	680	725	784	844	918	993	1066	1141	1215	1291	1364	1513	1661	1538
2472	693	737	797	857	931	1006	1079	1154	1229	1303	1377	1526	1674	1551
2624	533	550	575	598	628	657	688	717	748	777	806	866	926	877
2630	548	576	611	647	691	736	781	825	869	915	959	1048	1138	1063
2636	575	602	637	673	717	762	806	851	895	941	986	1074	1164	1089
2642	603	629	665	700	745	791	835	880	924	969	1014	1102	1192	1118
2648	619	654	701	750	809	868	928	988	1046	1106	1166	1284	1404	1304
2654	646	682	729	777	836	895	955	1015	1074	1133	1193	1312	1431	1332
2656	662	697	745	793	852	912	971	1031	1090	1149	1209	1328	1447	1347
2660	673	709	756	803	863	923	982	1041	1101	1161	1220	1339	1457	1359
2664	687	722	770	818	878	936	996	1056	1115	1174	1234	1353	1472	1372
2666	691	735	795	855	929	1003	1077	1152	1227	1301	1375	1523	1672	1549
2668	707	751	810	869	945	1019	1093	1167	1241	1316	1389	1539	1687	1564
2672	718	762	822	882	956	1031	1104	1179	1254	1328	1402	1551	1700	1576

How to Order

	series	dimensions (A B)	product	metal finish (Appx. A) WH BL SN **CHR (std)**
	LV		**UBC**	
Example	**LV**	2624	**UBC**	CHR

Tackboards

SBS

Surface mount

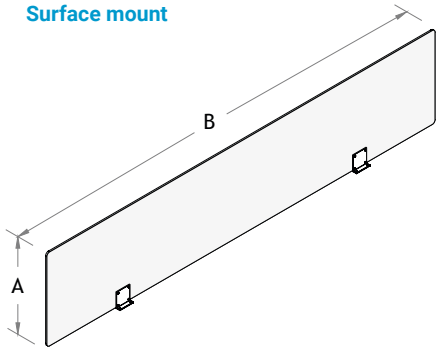

Manufacturing Standards

- 7/8" thick tackboard covered with fabric to be installed above a surface;
- 2 chrome-finish metal mounts for mounting on a surface.

Dimension "B" is 1/2" recessed.

COM Fabrics: *COM Fabrics are provided by the customer. For pricing please refer GR2 grade price.*

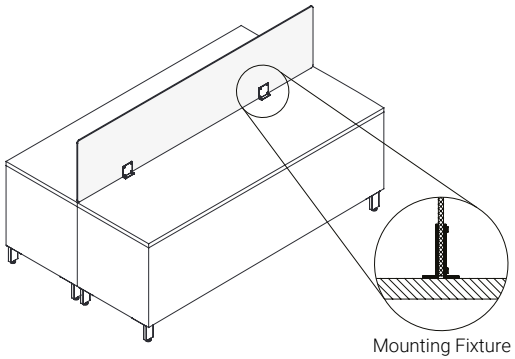

Mounting Fixture
Side View

Prices

Dimensions A B	GRA	GR1	GR2	GR3	GR4	GR5	GR6	GR7	GR8	GR9	GR10	GR11	GR12	leather cuir
1524	492	511	535	558	588	618	648	677	708	736	766	826	886	836
1530	499	525	561	597	642	687	731	776	820	865	909	998	1088	1014
1536	512	539	575	610	654	699	744	788	833	879	923	1011	1101	1026
1542	530	557	592	628	673	718	762	806	851	896	941	1030	1120	1044
1548	536	571	619	666	726	785	845	904	964	1023	1083	1202	1320	1221
1554	552	587	634	683	742	801	861	921	980	1039	1099	1217	1337	1237
1556	561	597	645	692	752	812	870	930	990	1050	1108	1228	1346	1247
1560	567	603	650	697	757	817	877	935	995	1055	1114	1233	1352	1252
1564	574	609	656	705	763	823	883	942	1001	1061	1121	1239	1359	1259
1566	575	619	678	737	813	887	960	1035	1109	1185	1258	1407	1555	1432
1568	582	626	686	745	820	894	968	1042	1118	1192	1266	1414	1563	1440
1572	588	632	692	752	826	901	974	1050	1124	1198	1272	1421	1570	1446

How to Order

		A B		WH BL SN **CHR (std)**
	LV		**SBS**	
	series	dimensions	product	metal finish (Appx. A)
Example	**LV**	1572	**SBS**	CHR

Tackboards

UBM

Under surface mount

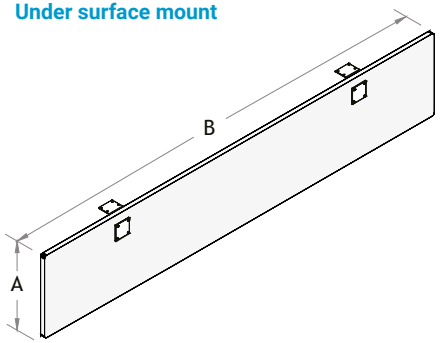

Manufacturing Standards

- 7/8" thick tackboard covered with fabric to be installed under a surface;
- 2 satin nickel finish metal mounts for mounting under a surface.

Dimension "B" is 1/2" recessed.

Note: *When ordering a divider screen that serves as a modesty, you must order a screen whose length is 6" shorter than the desk because of the width of the legs, ex: for a 66" desk order a 60" screen.*

COM Fabrics: *COM Fabrics are provided by the customer. For pricing please refer GR2 grade price.*

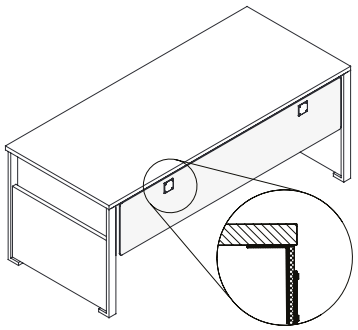

Mounting Fixture
Side View

Prices

Dimensions A B	GRA	GR1	GR2	GR3	GR4	GR5	GR6	GR7	GR8	GR9	GR10	GR11	GR12	leather cuir
1024	454	473	496	520	550	580	610	640	670	698	729	788	848	798
1030	461	489	524	560	605	650	694	739	783	828	872	961	1052	976
1036	477	504	540	576	620	665	710	754	798	844	888	976	1066	992
1042	492	519	555	590	634	680	725	769	814	859	903	992	1082	1007
1048	499	535	582	629	689	749	808	867	927	987	1045	1165	1283	1185
1054	515	550	598	646	706	764	824	884	943	1002	1062	1181	1300	1201
1056	523	559	607	654	714	774	833	892	952	1011	1071	1190	1309	1209
1060	528	564	612	660	719	779	838	898	957	1017	1076	1195	1314	1214
1064	537	572	620	667	727	786	846	905	965	1024	1084	1203	1321	1223
1066	536	580	640	698	774	848	922	996	1071	1145	1218	1368	1516	1393
1068	543	587	647	707	781	856	929	1003	1078	1153	1227	1376	1523	1401
1072	554	598	657	717	792	866	939	1015	1089	1164	1237	1386	1535	1411

How to Order

		A B		WH BL SN **CHR (std)**
	LV		**UBM**	
	series	dimensions	product	metal finish (Appx. A)
Example	**LV**	1072	**UBM**	CHR

Accessories

Handles

H051

Handle

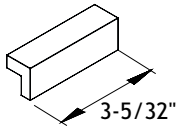

- 3-5/32" metal handle;
- 2-17/32" (64mm) center to center.

Code	$	Description
H051CHR	15	*Chrome*
H051SN	15	*Satin Nickel*
H051BL	15	*Black*
H051WH	15	*White*

H052

Handle

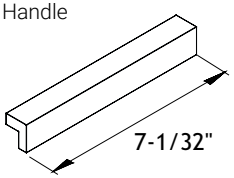

- 7-1/32" metal handle;
- 6-9/32" (160mm) center to center.

Code	$	Description
H052CHR	15	*Chrome*
H052SN	15	*Satin Nickel*
H052BL	15	*Black*
H052WH	15	*White*

H071

Handle

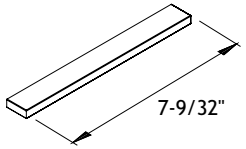

- 7-9/32" metal handle;
- 6-5/16" (160.338mm) center to center.

Code	$	Description
H071CHR	15	*Chrome*
H071BN	15	*Brushed Nickel*
H071BL	15	*Black*
H071WH	15	*White*

H072

Handle

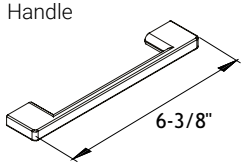

- 6-3/8" metal handle;
- 5-1/32" (127.8mm) center to center.

Code	$	Description
H072CHR	15	*Chrome*
H072BL	15	*Black*
H072WH	15	*White*

Keyboard Trays

KB360M

Keyboard Tray

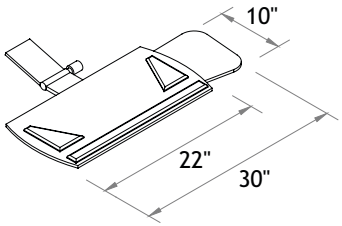

- Black plastic 24-1/2"wide retractable ergonomic keyboard;
- Lift-N-Lock spring system (no lever) to adjust height;
- Handle for easy tilt adjustment from 10" to 15";
- 10" x 7-1/2" mouse tray;
- 19" black gel wrist rest;
- 360º rotation.

Code	$	Description
KB360M	665	

KB

Keyboard Tray

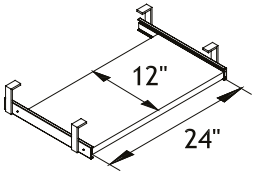

- 24" wide keyboard tray only;
- 5/8" and 1" thick laminate;
- Adjustable height from 1-3/4" to 2-3/4" / additional 2" for slides.

Code	$	Description
KB	210	*1" thick laminate*
KBT	198	*5/8" thick laminate*

KBMOD

Keyboard Tray

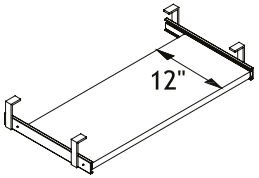

- Keyboard tray, available in lengths from minimum 24" to maximum 30";
- 5/8" and 1" thick laminate;
- Adjustable height from 1-3/4 to 2-3/4" / additional 2" for slides.

Code	$	Description
KBMOD	252	*1" thick laminate*
KBMODT	240	*5/8" thick laminate*

To order, for example a 27" long keyboard tray, 5/8" thick laminate: KBMODT27

KBMODR

Keyboard Tray

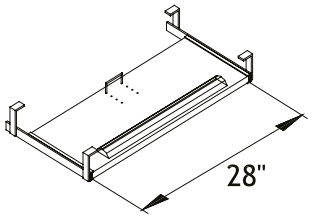

- 28" wide keyboard tray;
- 1" thick laminate;
- Adjustable height from 1-3/4 to 2-3/4" / additional 2" for slides;
- Black gel wrist rest / depth-adjustable stop handles.

Code	$	Description
KBMODR	341	

AP

Wrist Rest

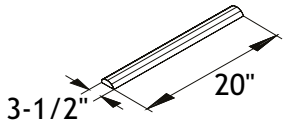

- Black gel wrist rest.

Code	$	Description
AP	80	

CPU Holders

MCPU50

Miniature CPU Holder

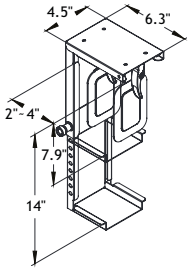

- Height adjustable: 8" - 14";
- Width adjustable: 2" - 4";
- Maximum capacity: 10 kg (22 lbs);
- Need a minimum 5" deep clearance.

Code	$	Description
MCPU50	185	

MCPU90

CPU Holder

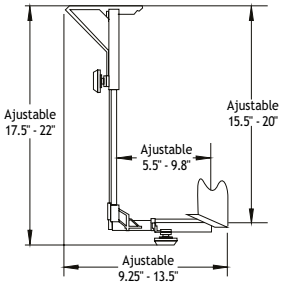

- Black metal CPU holder;
- Easy manipulation;
- Vertical adjustment:
  - Height: 15.5" x 20"
  - Width: 5.5" x 9.8"
- Horizontal adjustment:
  - Height: 17.5" x 22"
  - Width: 9.25" x 13.5"

Code	$	Description
MCPU90	234	*per unit*

CPUIND

CPU Holder

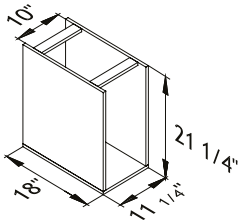

- 5/8" thick laminate CPU holder;
- 10" x 20" interior

Code	$	Description
CPUIND	199	*per unit*

Computer Monitor Brackets

C-1A

Computer Monitor Bracket

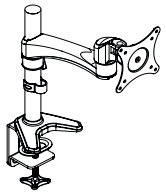

- Computer monitor bracket with fixed arm support;
- Height-adjustable arm;
- Clamp mounted;
- Finish: Black.

Code	$	Description
C-1A	150	

C-1B

Computer Monitor Bracket

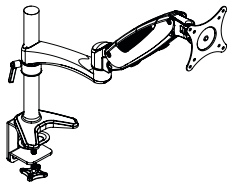

- Computer monitor bracket with flexible arm support;
- Height-adjustable arm;
- Clamp mounted;
- Finish: Black.

Code	$	Description
C-1B	255	

C-2A

Double Computer Monitor Bracket

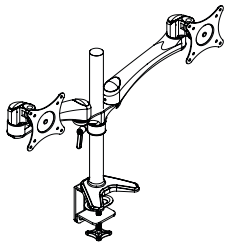

- Double computer monitor bracket with fixed arm support;
- Height-adjustable arms;
- Clamp mounted;
- Finish: Black.

Code	$	Description
C-2A	254	

C-2B

Double Computer Monitor Bracket

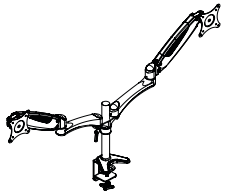

- Double computer monitor bracket with flexible arm support;
- Height-adjustable arms;
- Clamp mounted;
- Finish: Black.

Code	$	Description
C-2B	452	

C-2A-1S

Triple Computer Monitor Bracket

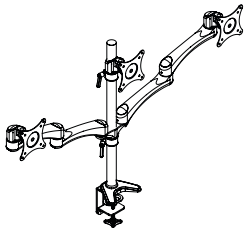

- Triple computer monitor bracket with fixed arm support;
- Height-adjustable arms;
- Clamp mounted;
- Finish: Black.

Code	$	Description
C-2A-1S	438	

C-2B-1S

Triple Computer Monitor Bracket

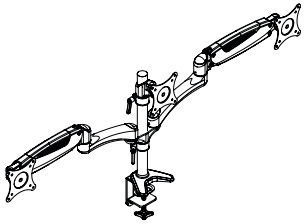

- Triple monitor bracket with 2 flexible arm supports;
- Height-adjustable arms;
- Clamp mounted;
- Finish: Black.

Code	$	Description
C-2B-1S	496	

SHIFT-2A

Shift Double Monitor arm with Docking

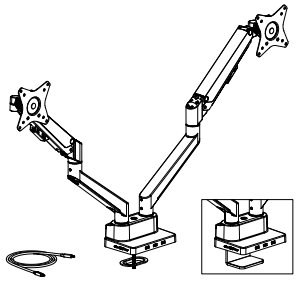

- 17" to 32" dual monitor arm support with flexible arms;
- 75mm and 100mm versa plate;
- Height adjustable arms that holds up to 8 kg (each);
- Clamp or Grommet mounted;
- Finish: Black;
- 8-in-1 Multiport docking station with:
  1 x Type - C Power distribution Port (100w)
  1 x Type - C Upstream port with type C cable included
  3 x USB-A Downstream ports
  2 x HDMI 2.0 Ports
  1 x RJ45 Ethernet port

Power distribution cable not included, follow electronic devices input recommendations.

Code	$	Description
SHIFT-2A	764	

Computer Monitor Brackets

BRSC1M4

Monitor Arm

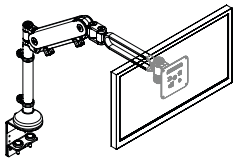

- Monitor arm with height-adjustable arm, clamp-mounted;
- Finish: Satin nickel.

Code	$	Description
BRSC1M4	776	

This is a Human Scale product.

BRSC1M7

Monitor Arm

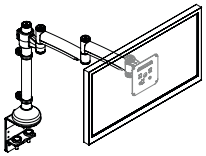

- Monitor arm with fixed-height arm, clamp-mounted;
- Finish: Satin nickel.

Code	$	Description
BRSC1M7	547	

This is a Human Scale product.

BRSC2M4

Double Monitor Arm

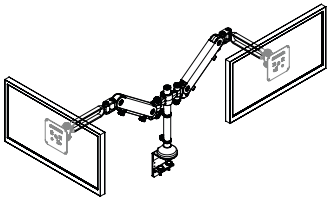

- Double monitor arm with height-adjustable arm, clamp-mounted;
- Finish: Satin nickel.

Code	$	Description
BRSC2M4	1364	

This is a Human Scale product.

BRSC2M7

Double Monitor Arm

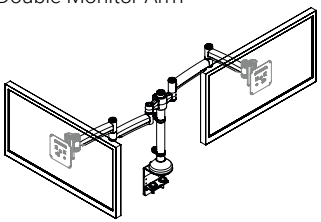

- Double monitor arm with fixed-height arm, clamp-mounted;
- Finish: Satin nickel.

Code	$	Description
BRSC2M7	847	

This is a Human Scale product.

BRSG1M4

Computer Monitor Bracket

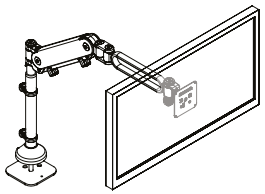

- Computer monitor bracket with height-adjustable arm;
- Grommet mounted;
- Finish: Satin Nickel.

Code	$	Description
BRSG1M4	745	

This is a Human Scale product.

BRSG1M7

Computer Monitor Bracket

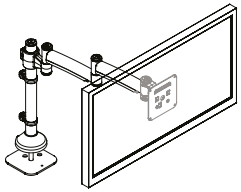

- Computer monitor bracket with fixed-height arm;
- Grommet mounted;
- Finish: Satin Nickel.

Code	$	Description
BRSG1M7	510	

This is a Human Scale product.

BRSG2M4

Double Computer Monitor Bracket

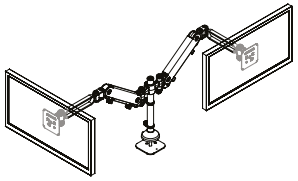

- Double computer monitor bracket with height-adjustable arm;
- Grommet mounted;
- Finish: Satin Nickel.

Code	$	Description
BRSG2M4	1354	

This is a Human Scale product.

BRSG2M7

Double Computer Monitor Bracket

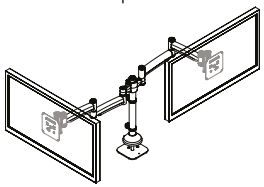

- Double computer monitor bracket with fixed height;
- Grommet mounted;
- Finish: Satin Nickel.

Code	$	Description
BRSG2M7	809	

This is a Human Scale product.

Miscellaneous Accessories

WD

Dividers

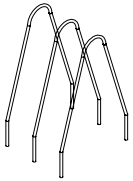

- Metal dividers.

Code	$	Description
WD	31	*Set of 3*

LK

Lock/key

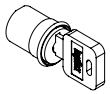

- Locks with keys
- Finish: Satin nickel or black finish;
- Additional locks, sold separately or factory installed;
- Please specify the type of furniture on which the will be installed.

Code	$	Description
LKSN	47	*Satin Nickel lock (factory installed)*
LKBL	47	*Black lock (factory installed)*
LKSNF	31	*Satin Nickel front lock*
LKBLF	31	*Black front lock*
LKSNP	31	*Satin Nickel door lock*
LKBLP	31	*Black door lock*
KEY	26	*Set of 2 keys - #501 - 600*
SERR 010	26	*1 master key*

TCPM

Sliding Drawer

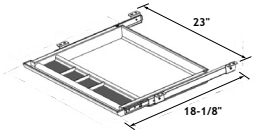

- Black plastic sliding drawer with steel ball bearing slides.

Code	$	Description
TCPM	210	

TIRA

Drawer

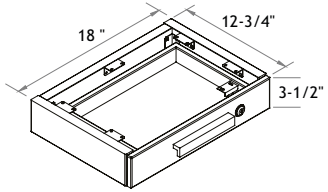

- Drawer and front 5/8" laminate;
- Frame 1" laminate;
- Lock included;
- Mounting brackets and screws included.

Code	$	Description
TIRA	224	*Drawer with lock*

ROUL035

Caster

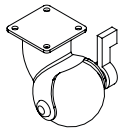

- Ball caster with break;
- Maximum static capacity: 40kg (88 lbs);
- Maximum dynamic capacity: 30kg (66 lbs).

Code	$	Description
ROUL035	29	

SB

Suspension Bars

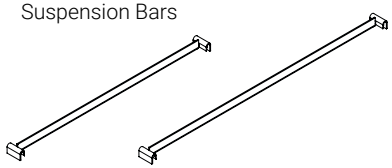

- Short suspension bars: 1 or 2 suspension bars for a left/ right filing for a regular file drawer;
- Long suspension bars: 1 or 2 suspension bars for a front/ back filing for a lateral file drawer.

Code	$	Description
SBV1	7	*1 short suspension bar*
SBV2	14	*2 short suspension bars*
SBH1	7	*1 long suspension bar*
SBH2	14	*2 long suspension bars*

SWV

Swivel Organizer Tray

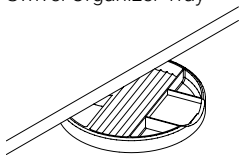

- Storage drawer that rotate 360 degrees;
- Mounts flush to the edge;
- Dimensions: 7-1/2"D x 8-7/8"W x 1"H.

Code	$	Description
SWV	68	

Miscellaneous Accessories

GRILLB

Ventilation grill

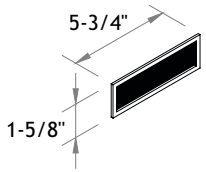

- Black plastic ventilation grill;
- Factory installation only.

Code	$	Description
GRILLB	62	

GRILLW

Ventilation grill

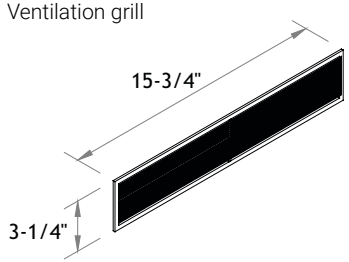

- White plastic ventilation grill;
- Factory installation only.

Code	$	Description
GRILLW	78	

CRLI 010

Hook

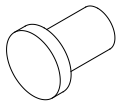

- Stainless steel hook.

Code	$	Description
CRLI 010	28	

CRLI 011

Hook

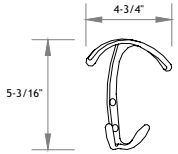

- Chrome finish double hook.

Code	$	Description
CRLI 011	49	

STP2

Stabilizer

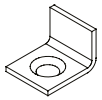

- Stabilizer for divider screens.

Code	$	Description
STP2	5	*Unit price*

IGSLV

Installation guide

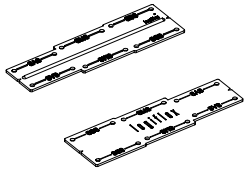

- Installation guide for surface mount divider screens LV SAS/SMS/SBS;
- Yellow PLA plastic ;

Code	$	Description
IGSLV	70	

Electrical Accessories

BE-KDHB-1

Single sided power block (1)

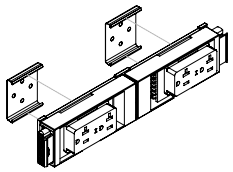

Set including:

- Single sided power block (1);
- 2 Duplex -1 circuit;
- 2 mounting plates;
- Max. 10 duplex per circuit (5 double half power block BE-KDHB-1).

Code	$	Description
BE-KDHB-1-BL	219	
BE-KDHB-1-WH	231	

BE-KDHB-4

Single sided power block (2)

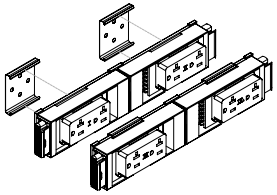

Set including:

- Single sided power block (2);
- 4 Duplex -1 of each circuit;
- 4 Mounting plates;
- Max. 40 duplex (20 double half power block).

Code	$	Description
BE-KDHB-4-BL	450	
BE-KDHB-4-WH	460	

BE-KDBSM-1

Double sided power block

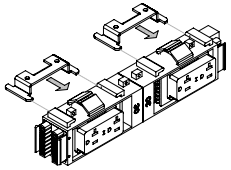

Set including:

- Double sided power block;
- 4 duplex -1 circuit;
- 2 slide mounting brackets;
- Max. 10 duplex per circuit (2 double power block).

Code	$	Description
BE-KDBSM-1-BL	422	
BE-KDBSM-1-WH	441	

BE-KDBSM-4

Double sided power block

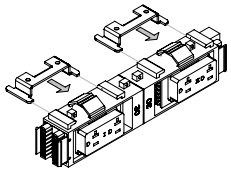

Set including:

- Double sided power block;
- 4 duplex -1 of each circuit;
- 2 slide mounting brackets;
- Max. 40 duplex (10 double power block).

Code	$	Description
BE-KDBSM-4-BL	422	
BE-KDBSM-4-WH	441	

SMWM

Cable Support

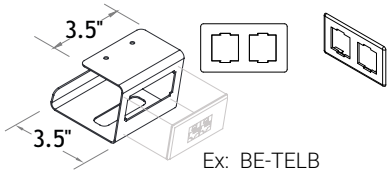

Ex: BE-TELB

- 3.5" metal wire support with 1 telecom plate cutout;
- Satin nickel finish.

Code	$	Description
SMWM	31	

BE-TELA

Telecom plate

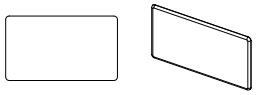

- Blank plate;
- 3-1/8" x 1-3/4";
- Colors: Black, White and Satin nickel;
- To be used with the APB, APF or AP2 cover plate option of the supply walls.

Code	$	Description
BE-TELA-BL	6	
BE-TELA-WH	6	
BE-TELA-SN	6	

BE-TELB

Telecom plate

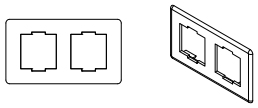

- 2 spaces to install connection ports;
- 3-1/8" x 1-3/4";
- Adapter included.
- Colors: Black, White and Satin nickel.

Code	$	Description
BE-TELB-BL	6	
BE-TELB-WH	6	
BE-TELB-SN	6	

BE-HW

Hardwired conduit power entry

* To be connected to an electrical box by an electrician.

- 8 wires - 4 circuits **20 Amp**;
- For 8 trac system;
- Bare wires at one end
- Male end.

Code	$	Description
BE-HW-72	197	*8 wire, 4 circuit - 72"L*
BE-HW-84	214	*8 wire, 4 circuit - 84"L*
BE-HW-96	239	*8 wire, 4 circuit - 96"L*
BE-HW-120	279	*8 wire, 4 circuit - 120"L*
BE-HW-180	409	*8 wire, 4 circuit - 180"L*

Electrical Accessories

BE-PI72

Corded Power entry

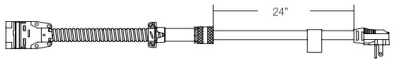

- Corded power entry of 72";
- Right angle **20 Amp** plug;
- Male end;
- 1 circuit **20 Amp**;
- Must be plug on 20A outlet

Code	$	Description
BE-PI72	244	

BE-NYHW

NYC flex hardwired power infeed

* To be connected to an electrical box by an electrician.

- 8 wires - 4 circuits **20 Amp**;
- Bare wires at one end;
- For 8 trac system;
- Male end.

Code	$	Description
BE-NYHW-72	444	
BE-NYHW-84	467	
BE-NYHW-96	483	
BE-NYHW-108	507	
BE-NYHW-120	526	

BE-J

M/M jumper

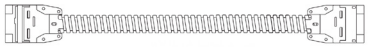

- Not adjustable;
- 8 wire - 4 circuits;
- M/M;
- For 8 trac system;
- Minimum 12" - Maximum 216".

Code	$	Description
BE-J12	126	*8 wire cable / 4 circuit - 12"L*
BE-J18	134	*8 wire cable / 4 circuit - 18"L*
BE-J24	142	*8 wire cable / 4 circuit - 24"L*
BE-J36	155	*8 wire cable / 4 circuit - 36"L*
BE-J42	165	*8 wire cable / 4 circuit - 42"L*
BE-J48	175	*8 wire cable / 4 circuit - 48"L*
BE-J54	182	*8 wire cable / 4 circuit - 54"L*
BE-J60	198	*8 wire cable / 4 circuit - 60"L*
BE-J66	206	*8 wire cable / 4 circuit - 66"L*
BE-J72	216	*8 wire cable / 4 circuit - 72"L*
BE-J78	229	*8 wire cable / 4 circuit - 78"L*
BE-J84	240	*8 wire cable / 4 circuit - 84"L*
BE-J96	259	*8 wire cable / 4 circuit - 96"L*
BE-J120	302	*8 wire cable / 4 circuit - 120"L*
BE-J216	561	*8 wire cable / 4 circuit - 216"L*

BE-HC

Harness connector F/F

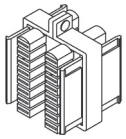

- Used to connect jumper cables;
- 1-1/2" x 2-1/4".

Code	$	Description
BE-HC	59	

BE-DHB

Single sided power block

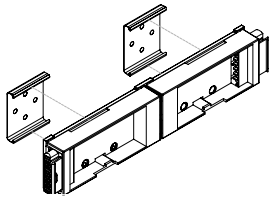

- Maximum of 2 duplex per block;
- Includes mounting plates ;
- F/F ;
- For 8-trac system ;
- Duplex ordered separately.

Code	$	Description
BE-DHB	114	

BE-DBSM

Double sided power block

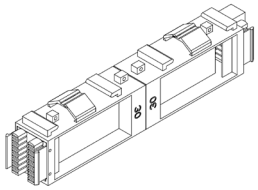

- Maximum of 4 duplex per block;
- For 8-trac system ;
- Slide mounting sold separately ;
- F/F ;
- Duplex ordered separately.

Code	$	Description
BE-DBSM	165	

Electrical Accessories

BE-D20-C

Duplex

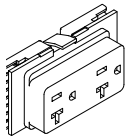

- **20 Amp**;
- Height 1-1/18";
- For BE-DHB & BE-DBSM blocks ;
- Colors: Black or white ;
- Maximum of 10 Duplex per circuit.

Code	$	Description
BE-D20-C-1-BL	52	
BE-D20-C-2-BL	52	
BE-D20-C-3-BL	52	
BE-D20-C-4-BL	52	
BE-D20-C-1-WH	59	
BE-D20-C-2-WH	59	
BE-D20-C-3-WH	59	
BE-D20-C-4-WH	59	

CHI

BE-SM58-2

Slide mount bracket

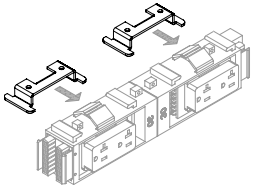

2 brackets;

- Only for the double power block (BE DBSM);
- 5/8" height;
- Screws included.

CHI

Code	$	Description
BE-SM58-2	45	

WM

Velcro Tie

- Velcro tie for electrical cable;
- The non-metallic buckle is safe to use around electrical devices;
- Dimensions: ¾" x 10";
- Color: black.

Code	$	Description
WM	14	*Unit price*
WMS	15	*with #8, 9/16" Robertson screw, per unit*

BR1

Branch unit

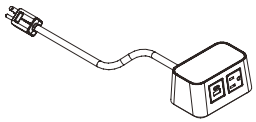

- 1 power outlet / 1 dual charger USB-a+c;
- Table top with braided storm 120 IN power cord.

Code	$	Description
BR1BL	564	*Black*
BR1WH	564	*White*

BR2

Branch unit

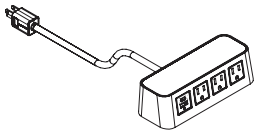

- 3 power outlet / 1 dual charger USB-a+c;
- Table top with braided storm 120 IN power cord.

Code	$	Description
BR2BL	726	*Black*
BR2WH	726	*White*

Electrical Accessories

BE-WMS-32

Power and data cable support single sided (1)

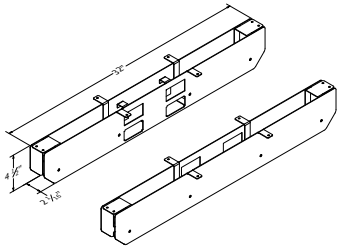

- 32" metal wire management system for power block BE-DHB and 2 telecom plate cutouts
- Channel to isolate power cables from data cables.
- Screws included to install the channel under a top.
- Power block, duplexes and telecom plates not included
- Colors : Black or white.

Code	$	Description
BE-WMS-32-BL	281	*Black*
BE-WMS-32-WH	281	*White*

BE-WMD-32

Power and data cable support double sided (1)

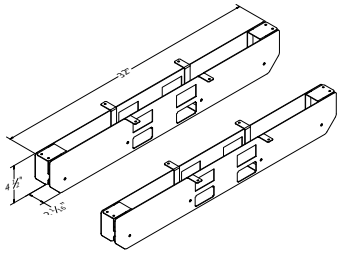

- 32" metal wire management system for power block BE-DBSM and 4 telecom plate cutouts.
- Channel to isolate power cables from data cables.
- Screws included to install the channel under a top.
- Power block, duplexes and telecom plates not included
- Colors : Black or white.

Code	$	Description
BE-WMD-32-BL	281	*Black*
BE-WMD-32-WH	281	*White*

MH1

Power/Data Centre

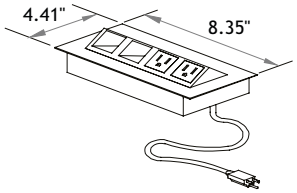

- Power/data centre with retractable door;
- 2 electrical outlets and 2 empty telecommunication outlets (outlets not included);
- 72" power cable with electric plug;
- 15A/125V. 1 set of universal adapters.

Code	$	Description
MH1SN	740	*Satin Nickel, 72" power cable*
MH1SN120	753	*Satin Nickel, 120" power cable*
MH1WH	740	*White, 72" power cable*
MH1WH120	753	*White, 120" power cable*
MH1BL	740	*Black, 72" power cable*
MH1BL120	753	*Black, 120" power cable*

MH1B

Power/Data Centre

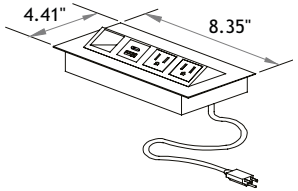

- Power/data centre with retractable door;
- 2 electrical outlets, 1 dual charger USB-a+c and 1 empty telecommunication outlet (outlet not included);
- 72" or 120" power cable with electric plug;
- 1 set of universal adapters.

Code	$	Description
MH1BSN	829	*Satin Nickel, 72" power cable*
MH1BSN120	843	*Satin Nickel, 120" power cable*

MH3A

Connectivity unit

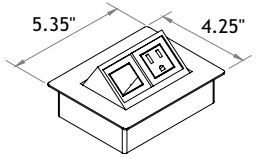

- Retractable connectivity unit with 1 electrical outlet and 1 empty telecommunication outlet (outlet not included);
- 72" or 120" power cable with electric plug;
- Finish: Satin Nickel.

Code	$	Description
MH3A	434	*Satin Nickel, 72" power cable*
MH3A120	449	*Satin Nickel, 120" power cable*

MH3B

Connectivity unit

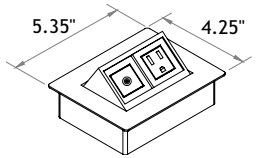

- Retractable connectivity unit with 1 audio jack and 1 electrical outlet;
- 72" or 120" power cable with electric plug;
- Finish: Satin Nickel.

Code	$	Description
MH3B	434	*Satin Nickel, 72" power cable*
MH3B120	449	*Satin Nickel, 120" power cable*

MH3C

Connectivity unit

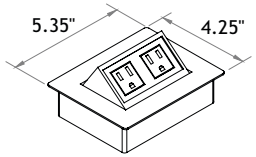

- Retractable connectivity unit with 2 electrical outlets;
- 72" or 120" power cable with electric plug;
- Finish: Satin Nickel.

Code	$	Description
MH3C	434	*Satin Nickel, 72" power cable*
MH3C120	449	*Satin Nickel, 120" power cable*

Electrical Accessories

MH3D

Connectivity unit

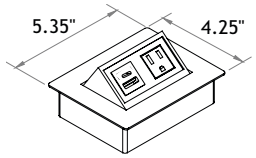

- Retractable connectivity unit with 1 electrical outlet and 1 dual charger USB-a+c;
- 72" or 120" power cable with electric plug;
- Finish: Satin Nickel.

Code	$	Description
MH3DSN	434	*Satin Nickel, 72" power cable*
MH3DSN120	449	*Satin Nickel, 120" power cable*
MH3DBL	434	*Black, 72" power cable*
MH3DBL120	449	*Black, 120" power cable*
MH3DWH	434	*White, 72" power cable*
MH3DWH120	449	*White, 120" power cable*

MH4

Connectivity unit

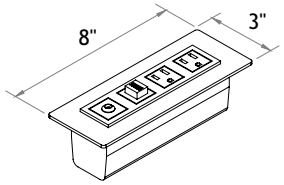

- Flat mounted connectivity unit with 2 electrical outlets, 1 audio jack input and 1 USB (charger);
- 72" power cable with electric plug;
- Finish: Black.

Code	$	Description
MH4	471	

BE1-DMB

Duplex Receptacle with Mounting Bracket

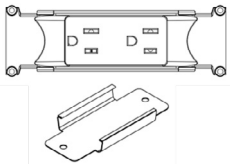

- Duplex receptacle **15 Amps**;
- Metal mounting kit included;
- M/M;
- For system 1 circuit **15 Amps**;
- Maximum of 8 duplex per circuit.

Code	$	Description
BE1-DMB	80	

BE1-DC

Connector F/F between Duplex

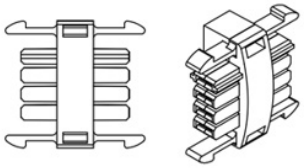

- Used to connect duplex to duplex;
- F/F;
- For system 1 circuit **15 Amps**.

Code	$	Description
BE1-DC	18	

BE1-PI

Corded Power Infeed 15 Amps

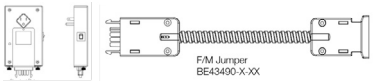

- Corded power infeed with **15 Amps** plug (in 2 section);
- Female end;
- For system 1 circuit **15 Amps**;
- Minimum 72" - Maximum 120".

Code	$	Description
BE1-PI72	607	
BE1-PI120	665	

BE1-J

Jumper F-F

- F/F jumper cable;
- Not adjustable;
- For system 1 circuit **15 Amps**;
- Minimum 60" - Maximum 120".

Code	$	Description
BE1-J18	85	Cable - 18"L
BE1-J36	104	Cable - 36"L
BE1-J48	122	Cable - 48"L
BE1-J60	131	Cable - 60"L
BE1-J72	148	Cable - 72"L
BE1-J120	197	Cable - 120"L

BE1-HC

H-Connector M/M

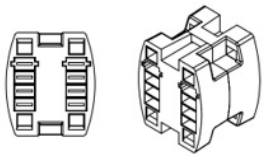

- H-connector M/M;
- Used to connect jumper cables F/F;
- For system 1 circuit **15 Amps**.

Code	$	Description
BE1-HC	29	

Electrical Accessories

POR 01

RJ45, CAT 6 connectivity port

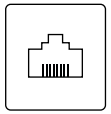

- RJ45, CAT6 connector;
- RJ45 M/F cable - 72" ;
- Finish: Black.

Code	$	Description
POR 01	156	

POR 02

RJ11 connectivity port

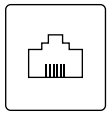

- RJ11 connector, 4 pin
- RJ11 M/F cable - 84";
- Finish: Black.

Code	$	Description
POR 02	45	

POR 03

USB connectivity port

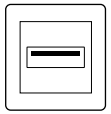

- 1 USB (data/passive);
- USB M/F cable - 72";
- Finish: Black.

Code	$	Description
POR 03	96	

POR 04

HDMI connectivity port

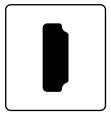

- HDMI connector;
- HDMI F/F cable - 18";
- Finish: Black.

Code	$	Description
POR 04	142	

POR 05

Mini Stereo Jack

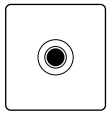

- 3.5 mm Mini Stereo Jack, M/F;
- Audio M/F cable -120";
- Finish: Black.

Code	$	Description
POR 05	50	

POR 06

VGA Connector

- VGA connector, 15 pin;
- VGA M/F cable -120";
- Finish: Black.

Code	$	Description
POR 06	180	

PBL

Power bar

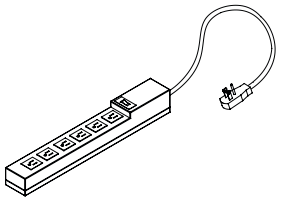

- Power bar with 6 electric outlets;
- 120" power cable with electric plug.

Code	$	Description
PBL	70	

CQI

Wireless Charger

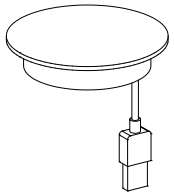

- Wireless air charger;
- Works with QI compatible devices;
- 59" USB cable with USB wall charger;
- Finish: Black, White.

Code	$	Description
CQIBL	128	Black
CQIWH	128	White

Electrical Accessories

QIIP

Transmitter for iPhone

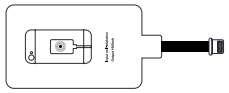

- Receiver for phones without Qi technology;
- For wireless charge devices;
- Adapter for Apple lightning port.

Code	$	Description
QIIP	122	

CT

Metal cable tray

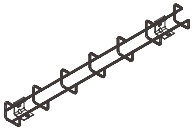

Metal cable tray

- In stainless steel;
- Dimensions: 2x4; Interior dimensions: 1-7/8"D x 1-7/8"H
- Length of 24" and 118" (118" can be cut on site).
- With mounting hardware

Code	$	Description
CT24	121	
CT118	255	

CTCOVER

Laminate cover

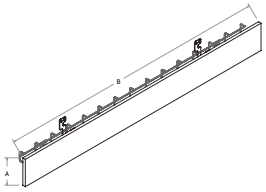

- Laminate cover for cable tray;
- Mounting brackets;
- Dimension "B" is 1/4" recessed.

Code	$	Description
06 30	58	*6 x 30*
06 36	63	*6 x 36*
06 42	69	*6 x 42*
06 48	74	*6 x 48*
06 54	82	*6 x 54*
06 60	88	*6 x 60*
06 66	94	*6 x 66*
06 72	100	*6 x 72*
06 78	107	*6 x 78*
06 84	112	*6 x 84*

DSG

Double-sided grommet

Double-sided grommet

- Hole diameter: 2.5"
- Use for electrical cable management with division panels. Drilling to be done by the installer.
- Grommet to cut on site for desired thickness to cover;
- Can not be cut with a simple utility knife, use a sharper and safer tool.

Code	$	Description
DSG BL	31	*Black*
DSG WH	31	*White*

WMP

Wire Management Pole

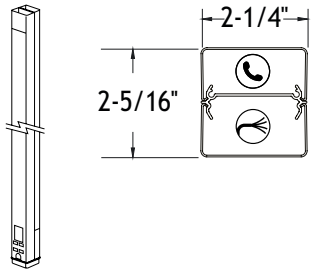

- Blank steel pole to bring cables from the ceiling to a work station;
- Satin nickel finish with a grey boot base;
- 2 compartments: 1 power/1 communications
- Mounting hardware, entrance end plate and ceiling trim plate included;
- Wires and outlets not included;
- Height: 12' 5".

Code	$	Description
WMP	492	

C_PF

Grommet

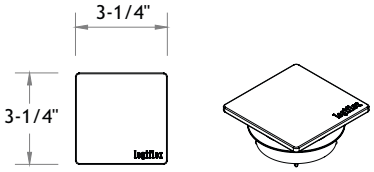

- Square metal grommet with the Logiflex logo engraved;
- Finish: Satin NIckel, Black and Chrome;
- 2-1/2" diameter cutout.

Code	$	Description
CAPF	28	*Unit price - Satin Nickel*
CBPF	28	*Unit price - Black*
CCPF	28	*Unit price - Chrome*
CDPF	28	*Unit price - White*

Electrical Accessories

DEL20

LED task light

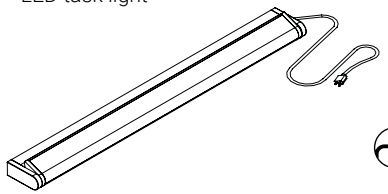

- 20" LED task light, 7.5W, cool white;
- 180° swivel feature;
- 72" power cable with electric plug;
- 20" connection wire for DEL20 task lamps;
- Finish: Satin nickel.

Code	$	Description
DEL20	236	*20" length*

T5

Florescent task light

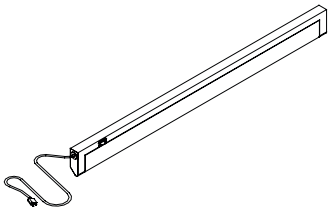

- Florescent lamp (T5) with swivel reflector and electronic ballast;
- 120" power cable with electric plug;
- 16" connection wire for T524, T536 or T548 florescent task lamps;
- Finish: Black and Satin Nickel

Code	$	Description
T524 BL	192	*24" length - Black*
T524SN	192	*24" length - Satin Nickel*
T536 BL	258	*36" length - Black*
T536 SN	258	*36" length - Satin Nickel*
T548 BL	340	*48" length - Black*
T548 SN	340	*48" length - Satin Nickel*

As our product line is constantly evolving and expanding, we recommend that you visit logiflex.ca for updates.

logiflex
1235 St-Roch N., Sherbrooke QC J1N 0H2 Canada
T : 1.877.864.9323 | F : 1.800.474.7830 | logiflex.ca

CERTIFIED INDOOR AIR QUALITY™ SCS GLOBAL SERVICES
INDOOR ADVANTAGE GOLD FURNITURE