MANHATTAN

Price List
USA 2025

logiflex

Table of Contents

Introduction 3

Update Summary 4
Product Map 5
Our social responsability 8
Conditions of Sale 8
Manufacturing Standards 9
How to Use the Price List 10
Appendix A: Colors and Finishes 11
Appendix B: Surfaces and Molding Edges 12
Appendix C: Modesty Panels 13
Appendix D: Wood Grain 14
Appendix E: Handle Finishes for Glass Doors 15
Appendix F: Pedestals and File Drawers 16
Appendix G: Pricing for Additional Adjustable Shelves 17
Appendix H: Pricing for Tops 18
Appendix I: Calculation / Use of Electrical Components 19

Desks 22

Shells (Empty Desks) 23
Desk with Convex Front 24

Returns 28

Empty Returns 29
Reversible Empty Returns 30
Returns with Lateral File Drawers 35
Returns with Cabinets 37
Bridges 39
Connection Tops 41

Tables 42

Corner Tables 47
Lateral Tables 48

Pedestals and Cabinets 50

Independent Pedestals 51
Mobile Pedestals 56
Combination Pedestals 58
Lateral Filing Cabinets 59

Credenzas 60

Credenzas with Lateral Filing Cabinet 65
Credenzas with Cabinets 67
Combination Credenzas 69
Server Credenzas 72
Server Credenzas with Utility Drawers 73

Hutches and Wall Storage 75

Adjustable Shelf Hutches 76
Wall Hutches 77
Desk Hutches 81
Tackboards 86

Bookcases and Cabinets 88

Wardrobes 91
Wardrobes with Pedestals 96
Cabinets 98

Accessories 109

Handles 110
Legs 111
Keyboard Trays 114
CPU Holders 115
Computer Monitor Brackets 116
Miscellaneous Accessories 118
Electrical Accessories 120

Introduction

Elegant and distinguished, the Manhattan furniture collection offers ideal options for furnishing a private office. With its heavier surfaces and choice of moldings, the collection lends a sophisticated look to your space.

Update Summary

The Manhattan price list presents these principal modifications:

DATE	SECTION	MODIFICATIONS
March 3, 2025	All the Price List	• All prices have been increased by approximately 3%.
	Hutches	• Addition of the grommet option (GRH) for adjustable shelves hutches and desk hutches.

Previous updates:

DATE	SECTION	MODIFICATIONS
December 10, 2024	Accessories	• Addition of the Shift double monitor arm with docking: SHIFT-2A.
March 1, 2024	All the Price List	• All prices have been increased by approximately 5% except products with HPL surface. The Manhattan MAL series has been increased by 10%.
November 22, 2023	Appendix A	• Removal of high gloss finish.
	Electrical accessories	• Addition of the wire management system BE-WMS-32 & BE-WMD-32. • Addition of items for 15a electric circuit: BE1-DMB, BE1-DC, BE1-PI, BE1-J & BE1-HC. • Removal of OAS, INT, COV1 & F-714.
July 24, 2023	Hutches	• Removal of the wiring space at the bottom of hutches.
July 4, 2023	Electrical accessories	• Chicago Code : Certain electrical components are now marked prohibited or restricted for orders in chicago. (USA pricelist only).

Product Map

Desks

Shells (Empty Desks) p. 23

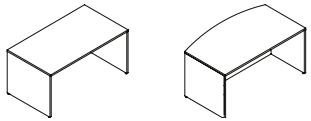

BV BCX

Desks with Pedestals p. 25

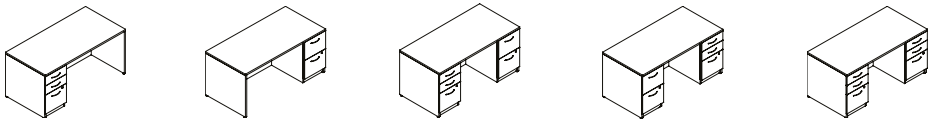

BEL/BFL BER/BFR BEF BFE BEE

Returns

Empty and Reversible p. 29

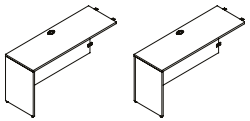

RVL REVL

Returns with Pedestals p. 31

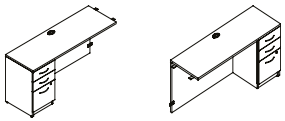

REL/RFL RER/RFR

Returns with Combination Pedestals p. 33

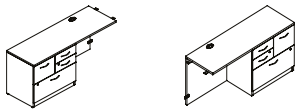

RCBCL RBCCL

Returns with Lateral File Drawers p. 36

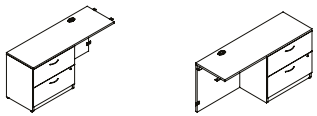

RCLL RCLR

Returns with Cabinets p. 37

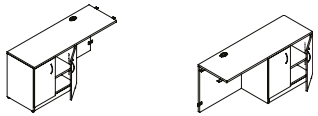

RARL RARR

Bridges p. 39

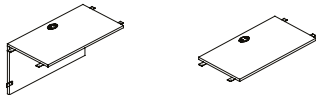

BR BRT

Connection Tops p. 41

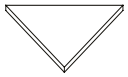

TRTOP

Tables

D, P and Rectangular Tables p. 43

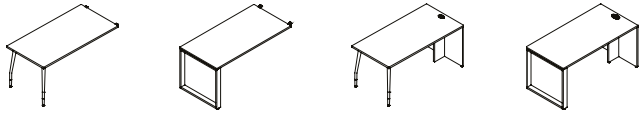

REI REIO REG REGO

Corner Tables p. 47

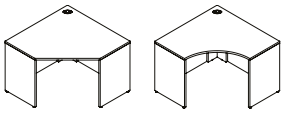

CT CTC

Lateral Tables p. 48

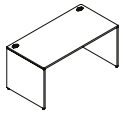

TL

Product Map

Pedestals and Cabinets

Independent Pedestals p. 51

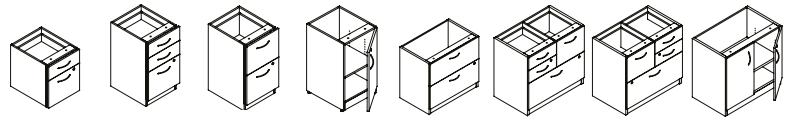

DIND | EIND | FIND | ARRIND | CLIND | BCCLIND | CBCLIND | ARIND

Mobile Pedestals p. 56

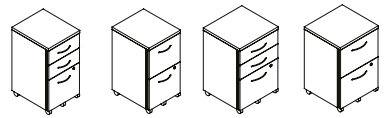

MOBE | MOBF | MOBXE | MOBXF

Combination Pedestals p. 58

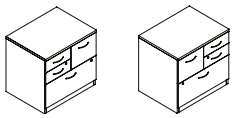

PBCCL | PCBCL

Lateral Filing Cabinets p. 59

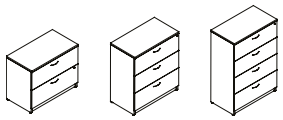

CL2 | CL3 | CL4

Credenzas

Credenzas with Pedestals p. 61

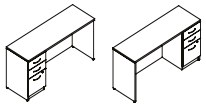

CEL/CFL | CER/CFR

Credenzas with Combination Pedestals p. 63

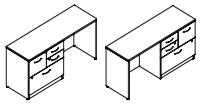

CCBCL | CBCCL

Lateral Filing p. 65

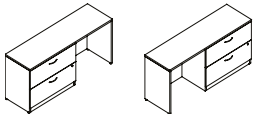

CCLL | CCLR

Cabinets p. 67

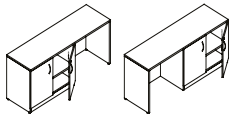

CARL | CARR

Combination Credenzas p. 69

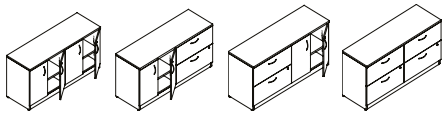

ARAR | ARCL | CLAR | CLCL

Server Credenzas p. 72

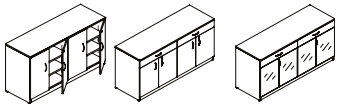

SCARAR | SCU02 | SCU02FL

Hutches

Adjustable Shelves p. 76

HAS

Wall Hutches p. 77

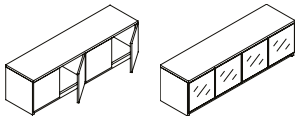

HPW | HPFLW

Wall Hutches with Pigeon Hole Unit p. 79

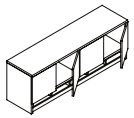

HPPGW

Desk Hutches p. 80

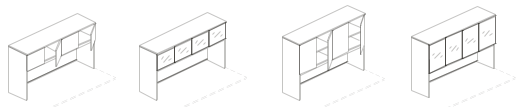

HP | HPFL | HPA | HPAFL

Desk Hutches with Pigeon Hole Unit p. 84

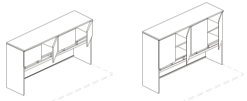

HPPG | HPAPG

Tackboards p. 86

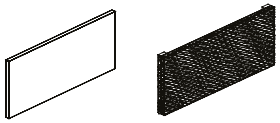

TB | TBW

Product Map

Bookcases and Cabinets

Bookcases p. 91

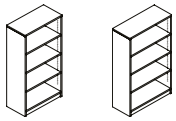

BBL30 BBL36

Wardrobes p. 92

VR VRFL V VFL ARV

Wardrobes with Pedestals p. 96

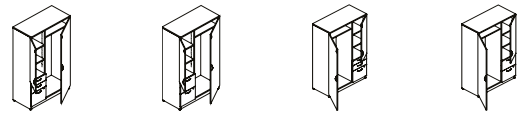

AREV ARFV VARE VARF

Cabinets p. 98

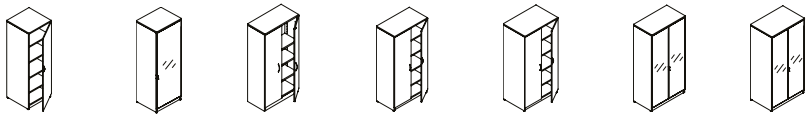

ARR ARRFL AR15 AR20 AR24 ARFL20 ARFL24

Multiple Units p. 105

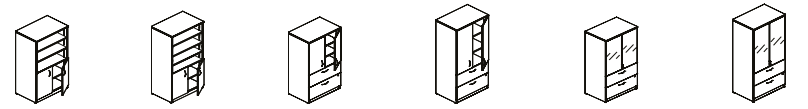

MU4 MU5 MU23 MU24 MU23FL MU24FL

Our social responsability

At Logiflex, we have chosen to be a responsible North American manufacturer by implementing initiatives for sustainable development. As much as possible, we source local materials and partner with suppliers who prioritize clean manufacturing processes. We also consolidate goods during transport to reduce ou fuel consumption and we continually make changes that help reduce our waste production.

The company is ISO 9001 certified.

You can consult our eco-responsible approach as well as all our certifications in the Certifications section of our website. Find out how our products can help you obtain LEED credits and the Logiflex products that are Indoor Advantage Gold certified.

Conditions of Sale

Prices

The amounts listed in this document are suggested retail prices and may be changed without notice. Applicable taxes are not included. If you have an open and active account with Logiflex, merchandise will be invoiced at the prices prevailing at the time of shipment. A deposit may be requested if the opening of your account has not been completed or if your account has become inactive.

Terms of Payment

Net 30 days F.O.B. Sherbrooke, Quebec. The invoice will be assigned the shipping date and is payable 30 days from that date. Logiflex remains the owner of the merchandise until the invoice is paid in full.

Customized Products (Special Items)

Price requests for customized products or special items can be submitted via the "Member Zone" section of our website, at www.logiflex.ca. Our quotations department will study your request and send you a quotation and a technical drawing for approval as soon as possible. Modifications to quotations or technical drawings can be requested the same way. The approved quotation(s) and technical drawing(s) can then be attached to your purchase order.

Orders

An official purchase order must be issued for all purchases. Your purchase order must contain the following information:

- Your company letterhead
- Your reference number
- The delivery address (with contact name, email and phone number)
- The complete product codes
- Furniture colour(s)
- Quantities
- Descriptions
- Retail prices and net prices
- Project registration number (if applicable), and your approved quotation and technical drawing (for special items).

Please note that a quotation cannot serve as a purchase order.

Returns

All returns must first be approved by Logiflex. If the return is accepted, a Logiflex customer service representative will send you an official return authorization form in order to facilitate procedures between you, the carrier, and the Logiflex merchandise reception clerk. Additional costs for shipping or other expenses may be applied following any merchandise returns.

Modifications and/or Cancellations

You have 48 hours from the time we acknowledge receipt of your order to make any requests for corrections or modifications. You may cancel your order during this same 48-hour period. If you would like to modify or cancel your order after this 48-hour verification period, please check with a Logiflex customer service representative. Orders cannot be changed or cancelled if production has already begun or if Logiflex has already received the raw materials.

Liability

Logiflex's liability ends once the carrier has delivered all items in good condition. A delivery receipt signed by the customer acknowledges that the shipment is complete and has been received in good condition.

Claims

Logiflex recommends inspecting the shipment before signing the carrier's delivery receipt. You must notify Logiflex of any incomplete shipments or damaged furniture within 30 days after delivery. Requests to replace damaged products can be made via the "Member Zone" section of our website, at www.logiflex.ca. Our after-sales service department will examine your request and help you correct the situation.

Changes

Logiflex reserves the right to make changes to the materials, accessories, components, specifications and designs, and to discontinue collections and/or models, at any time and without prior notice.

Storage and/or Shipping Fees

According to the terms Logiflex set forth in the transport policy. The transport policy can be consulted online in the Private Space.

Items Delivered Disassembled

Some items are delivered disassembled, such as empty desks, empty returns, bridges, arched tables, D, P or Q tables, lateral tables, end tables, hook tables, corner tables and extended-corner tables.

Warranty

Logiflex guarantees to the original purchaser that Logiflex products are free from defects in design, materials and workmanship for the product's lifetime, with certain exceptions.

You may consult the full warranty on the website: **Logiflex Warranty**

Manufacturing Standards

Product Dimensions

For display purposes, the furniture dimensions represented in the price tables on each product page are rounded to the nearest whole number.

Furniture Construction

- Desktops are 1-5/8" thick laminate;
- Legs are 1" thick laminate;
- Fronts, backs and modesties are 5/8" thick laminate.

Handles

Handles are included for all the Manhattan furniture items with fronts (Exception of hutches, for which handles are sold as options). For the other series, handles are included for the majority of furniture items with fronts (Exception of some pedestals and hutches, for which handles are sold as options). The standard handle style, when included, is HJAB (black). Please refer to the Logiflex handle selection in the Accessories section at the end of this price list.

Grommets

Grommets are included for some items such as D,P and REG tables, lateral, end, corner, extended-corner and arc tables, and returns. When grommets are included, the standard style is the ELPF grommet.

Locks

LKBL (black) locks are included for some items, such as pedestals, lateral file drawers, cabinets, wardrobes, combination units and credenzas. To specify a different type of lock, please refer to the Accessories section at the end of this price list to see the different models offered by Logiflex.

Pedestals

All drawers are made of black Medium density fiberboard (MDF) with an average thickness of 7/16". Type D, E and F pedestals include a black polyvinyl chloride (PVC) extrusion for easy finger grip operation (no handle).

Drawer Fronts

A PVC strip 1.5 mm thick is systematically applied along all drawer front edges.

Wood Grain

The wood grain is always vertical on fronts and furniture doors. Surfaces more than 96" are in two parts. Logiflex cannot guarantee that the wood grain will match up on the different parts of a same surface.

Hutches

All hutches have a round grommet at the back of the unit for light fixture wires.

Finishes

You must specify the desired finish(es) for each item of furniture ordered. Please make your selection(s) from the Logiflex chart.

Fabric

You must specify the fabric when the item so requires. Please make your selection(s) from the Logiflex chart.

Levelers

All furniture items (except bridges) sit on 1" in diameter, white nylon levelers, allowing for up to 1-1/4" height adjustment. The standard finished height for work surfaces is 29".

How to Use the Price List

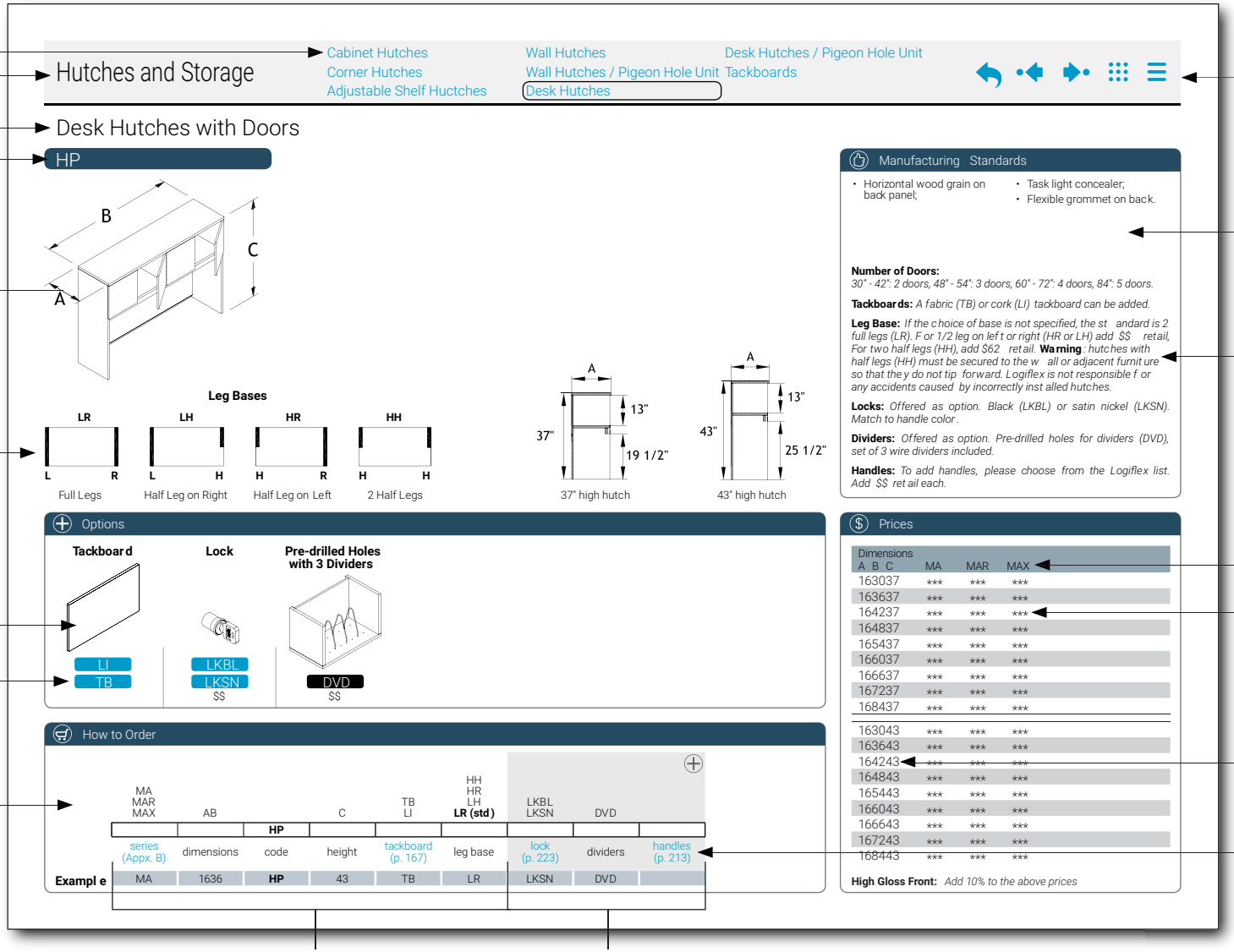

Appendix A: Colors and Finishes

How to specify your laminate colors

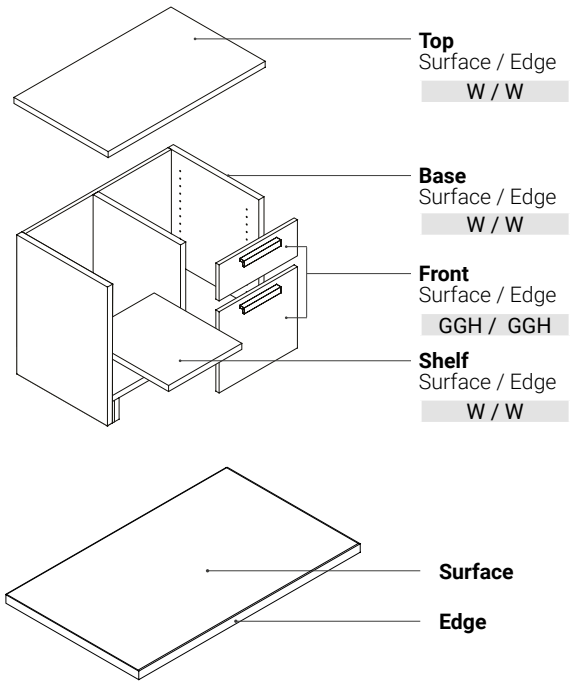

Glass and Acrylic

V4	White Glass
V5	White Satin Glass
KB	Jet Black Glass
KS	Black Satin Glass
KE	Ocean Blue Glass
KO	Overseas Blue Glass
KR	Bright Red Glass
KM	Metallic Gray Glass
KA	Satin Silver Glass
KG	Satin Gold Glass
VS	Frosted Glass
PL	Frosted Acrylic

Availablility Chart

FINI FINISH	CODE	COLOR COULEUR	THICKNESS ÉPAISSEUR ⅝"	1"	1-⅝"	HPL STRATIFIÉ	PANVAL CODE
OMNIA	DOO	Dosha	•	•		•	K77
	COO	Cosmos	•	•		•	K78
AURA	GIA	Ginger Root | Gingembre	•	•		•	H72
	HAA	Haze | Brume	•	•	•	•	H57
	OHA	Ohm	•	•	•	•	K69
	STA	Storm | Tempête	•	•	•	•	H58
	TUA	Tundra	•	•		•	H75
LYRA	ASY	Asha	•	•		•	K47
	CIY	Chiffon | Mousseline **	•	•	•	•	K60
	KAY	Kali	•	•		•	K46
SUPERMAT	IGS	Ingot grey | Gris lingot	•	•			828
	WGS	Willow grey | Gris saule	•	•			802
DOLOMITE	AU	Audacity | Audace **	•	•	•	•	241
	B	Jet Black | Noir intense *	•	•		•	888 | S405-CA
	BC	Brown cherry | Cerisier brun	•	•	•	•	207
	C	Slate | Ardoise *	•	•		•	801
	DR	Driftwood | Bois de rive	•	•		•	744
	G	Mink Grey | Gris vison	•	•		•	805 | OU-927
	NM	Natural Maple | Érable naturel	•	•	•	•	206
	PO	Porto	•	•		•	913 | OU-648
	SW	Smoked Walnut | Noyer fumé	•	•	•	•	G21
	TO	Tobacco	•	•		•	205
	W	Polar White | Blanc polaire	•	•	•	•	555 | 459-CA
	WK	Whisky	•	•	•	•	245

* Non recommended color for work surfaces.
** For conference tables with 2 or more parts, we do not recommend the use of colors with irregular and contrasted woodgrain like Chiffon, Audacity or Coastal Pear as it results in a pronounced wood grain mismatch.

Colors may vary from 2% to 5% between tfl and hpl laminates due to different technical applications.

See our complete **Colors & Finishes Guide**

N New

Appendix B: Surfaces and Molding Edges

SERIES	PREVIEW	COMPONENT	MATERIAL	EDGES / MOLDING
MA	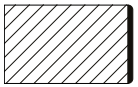	**1-5/8" surface**	Thermofused laminate (TFL) - 1-5/8" high-density particle board.	1.5 mm polyvinyl chloride (PVC)
MAL	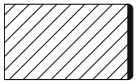	**1-9/16" surface**	High pressure laminate (HPL) - 1-1/2" high-density particle board, 1/32" HPL sheet on surface, 1/32" balancing sheet under surface (prevents bending).	1.5 mm polyvinyl chloride (PVC)
	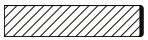	**Front, back and modesty**	Thermofused laminate (TFL) - 5/8" high-density particle board.	1.5 mm polyvinyl chloride (PVC) on showing surfaces and 0.5 mm polyvinyl chloride (PVC) on non-showing surfaces.

Appendix C: Modesty Panels

Modesty Height

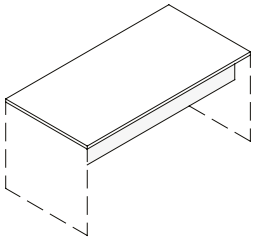

10" high
PM

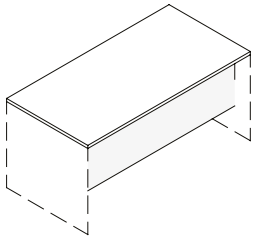

18-1/2" high
SM

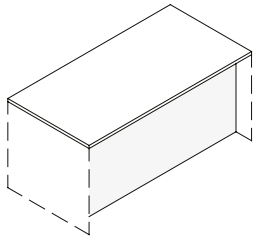

Full height
FM

Minister Modesty

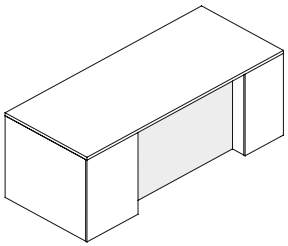

Minister Front
MID

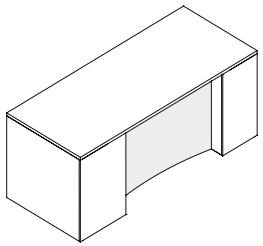

Curved Minister
MIDC

Recessed Modesty

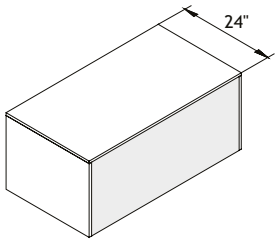

Flush Modesty

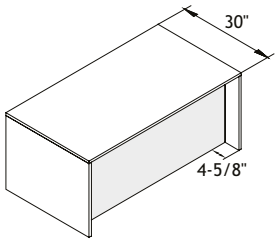

Modesty Recess
4-5/8" for 30" desk

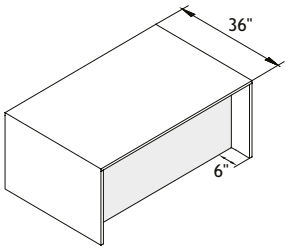

Modesty Recess
6" for 36" desk

Appendix D: Wood Grain

Wood grain runs lengthwise on surfaces and vertically on drawers, doors and legs.
See image below for wood grain direction placements.

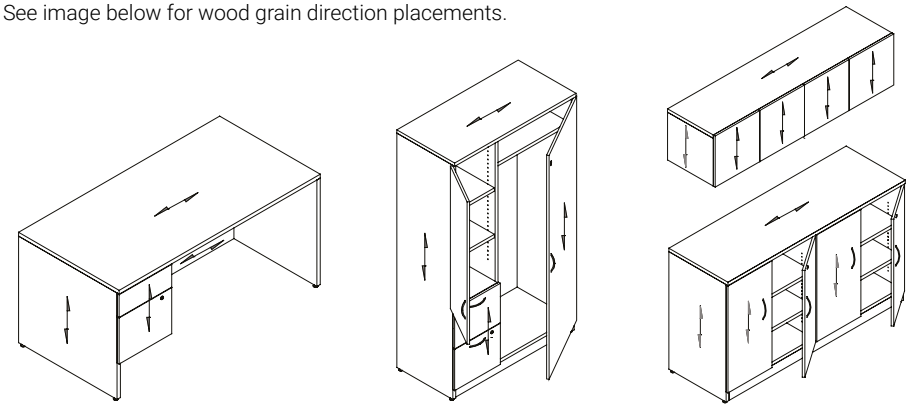

Wood grain on returns:

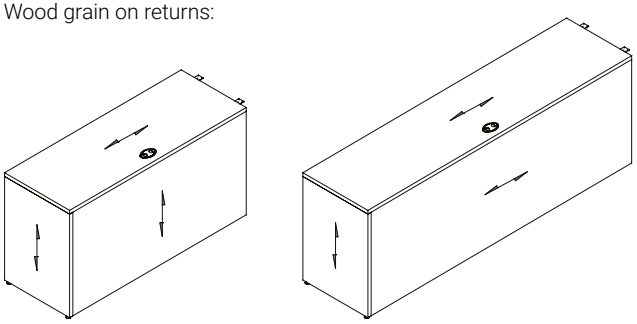

Less than 60"

More than 60"

Appendix E: Handle Finishes for Glass Doors

FL - Glass Doors

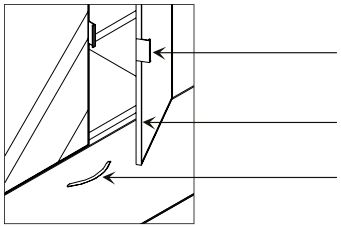

Built-in aluminum handles

Aluminum-frame door

Handles: HJA (Satin Nickel)
For handles other than the HJA standard, please choose from the Logiflex list, no charge *(p. 110)*.

Appendix F: Pedestals and File Drawers

D, E and F Pedestals

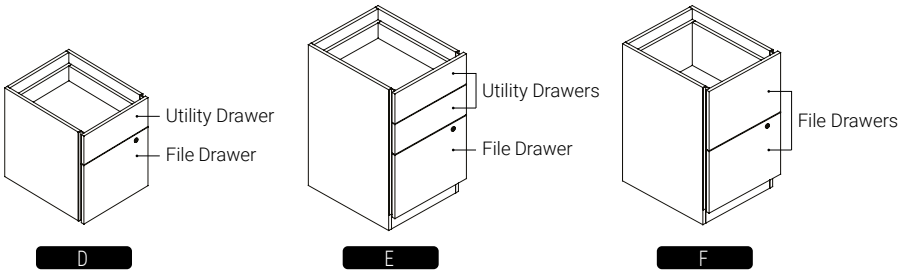

Combination Pedestals

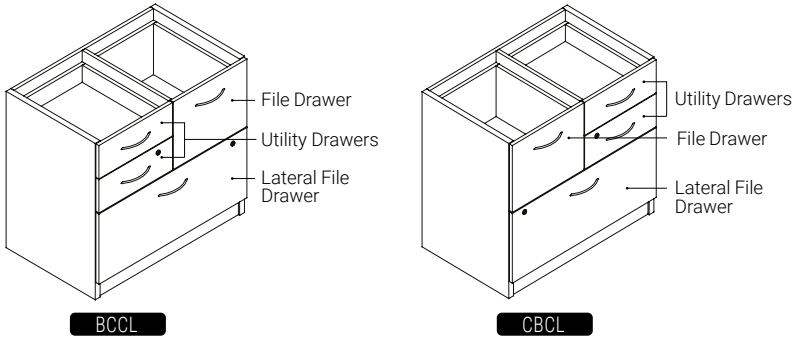

File Drawers

File drawers can receive either legal or letter formats. Please refer to the illustration below.

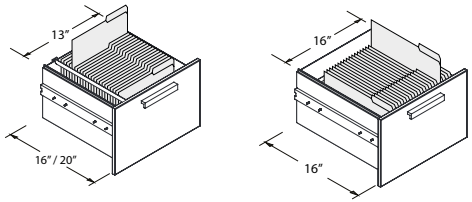

Letter format

Legal format

Lateral File Drawers

Lateral file drawers can receive either legal or letter formats. Please refer to the illustration below.

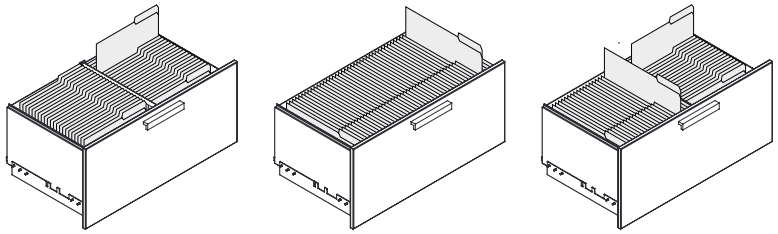

Legal and Letter formats

30" and 36" file drawers can accomodate 2 rows of files.
42" file drawers can accomodate 3 rows of files.

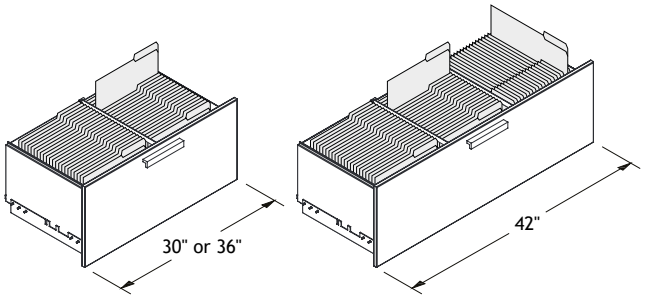

2 rows of files

3 rows of files

*For solidity purposes, ensure all files are suspended.

Appendix G: Pricing for Additional Adjustable Shelves

To find out the price for additional adjustale shelves, trace down the vertical column "A" the shelf depth to its intersection with columns "B" the shelf length.

$		B								
		12"	15"	18"	20"	24"	30"	36"	42"	48"
A	12"	24	28	37	39	45	56	68	78	90
	15"	28	38	43	46	56	70	84	98	113
	16"	29	39	45	48	61	76	90	105	121
	20"	39	46	56	63	76	93	113	132	148
	24"	45	56	68	76	90	113	135	156	180
	30"	56	70	84	93	113	139			

Appendix H: Pricing for Tops

To calculate pricing for desk and table tops, use the following formula:

Calculation of retail price
Depth x Width / 144 x sq. ft. price = Retail Price*
Ex.: 24" x 48" = 1152 / 144 = 8 x $44 = $256

Rectangular Surfaces

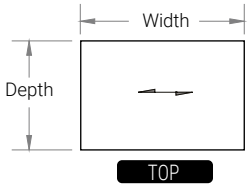

Circular Surfaces

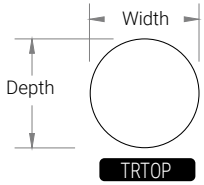

Retail Price per square foot			
MA		MAL	
Rectangular Surfaces	Circular Surfaces	Rectangular Surfaces	Circular Surfaces
$ 44	$ 46	$ 75	$ 78
1-5/8" surface Thermofused laminate (TFL) - 1-5/8" high-density particle board with 1.5 mm polyvinyl chloride edge.		**1-9/16" Surface** High pressure laminate (HPL) - 1-1/2" high-density particle board, 1/32" HPL sheet on surface, 1/32" balancing sheet under surface (prevents bending) with with 1.5 mm polyvinyl chloride edge.	

***Note:** A minimum fee of $108 is applied to prices of lesser amounts.

Surface Price Calculator

In the fields below, input the desired depth and width as well as the square foot price found in the above price grid.

Dimensions

in.	x	in.	/ 144 x	$	= $ 0
Depth		Width		Square foot price	**Total** (surface only)

Reset Form

How to Order Top

MA	Dimensions	TOP	Grommet option	Grommet model	Laminate color

Grommets: It is possible to add grommets to the rectangular surfaces.

Options

Grommet Position

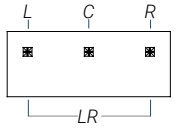

Grommet Style

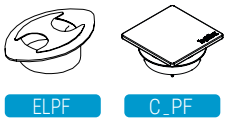

Appendix I: Calculation / Use of Electrical Components

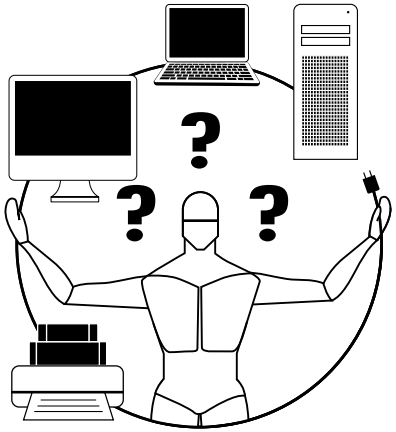

An Introduction to Calculation and Use of Electrical Components

Most people are uncomfortable with anything related to electricity. This step-by-step guide is intended for people who are not familiar with electrical installations but who have to specify what system they need when ordering furniture. In this guide, you will learn how to choose and specify the electrical components required for your projects. The list that follows illustrates and identifies each product and describes its applications.

The electrical components are all recognized by the Underwriters Laboratory (UL) as office furniture accessories and are manufactured according to Canadian Standards Association (CSA) and UL electrical standards.

Note: All electrical connections must be performed by a certified electrician.

By following these 3 simple steps, you can easily determine the number of circuits required to ensure safe use of your electrical system.

1. Determing the Number of Amperes Required
2. Calculating the Total Amperes
3. Determing How Many Circuits You Need

STEP 1:
Determing the Number of Amperes Required

What is Amperage
An Ampere (Amp or A) is a unit for measuring the rate at which electric current flows. All electrical equipment has an amperage rate. By following these few simple steps, you can easily determine the number of circuits required to ensure safe use of your electrical equipment.

Determine the Number of Amperes Required
On your computer or other electric devices (ie: monitor, central processing unit, printer) find the plate that provides the technical specifications as follows:

Input: 120V - 1.8A.

If you cannot locate this information on the machine, you will probably find it in the user manual.

Here are a few examples of how many Amps some equipment may consume. Please note that these are examples and the number of amperes may vary from one machine to another.

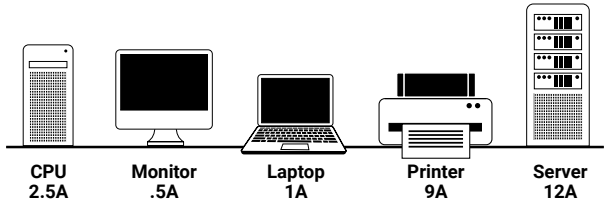

Electrical System Capacity

Our electrical system is designed for circuits of 20 amps each. This includes electrical components such as computers, printers, laptops, monitors, server or other devices.

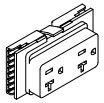

20A

A single Duplex has a maximum capacity of 20 A

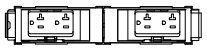

Each power block can hold 2 Duplex

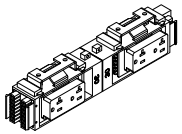

Each power block can hold 4 Duplex

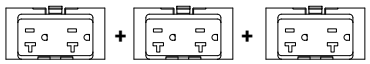

If the duplexes are connected to the same circuit, the capacity is divided between them. For example, 3 duplexes connected to the same circuit have a total capacity of 20A.

Appendix I: Calculation / Use of Electrical Components

STEP 2:
Calculating the Total Amperes

Add the Amperes

Add the number of amps for each machine. In our example, there are 4 CPUs at 2.5A per computer, 4 monitors at 0.5A and one printer at 9A.

2.5A + .5A + 2.5A + .5A + 2.5A + .5A + 2.5A + .5A + 9A = **21A**

The total number of amperes used in this example equals to 21A.

Divide by 16

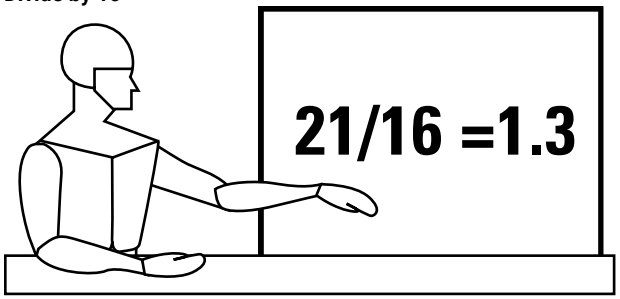

Most machines and computers used in offices or schools are used continuously for many hours at a time. In this type of situation, national electrical codes usually limit circuits at 80% of their capacity of continuous use. Our electrical system is designed for circuits of 20 amps each. So 80% of 20A is 16 Amps You must therefore divide the total number of amperes calculated by 16.

STEP 3:
Determing How Many Circuits You Need

In most cases, this number will contain decimals. Round up to the next whole number, and this will be the number of circuits required for your equipment to run safely. If the number obtained is higher than 4 (the maximum number of circuits for a system), you must reduce the total amperage or add another electrical system. Continuing with our example, the 1.3A is rounded up to 2A.

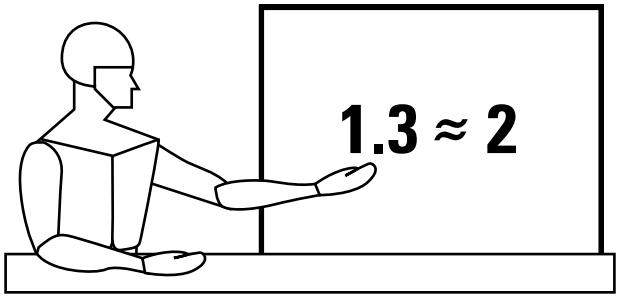

Here is one possible configuration. Using 5 power blocks joined together with junction cables, only 2 circuits are being used. The 4 workstations would be on the first circuit for a total of 16 amps. The printer would be on the second circuit.

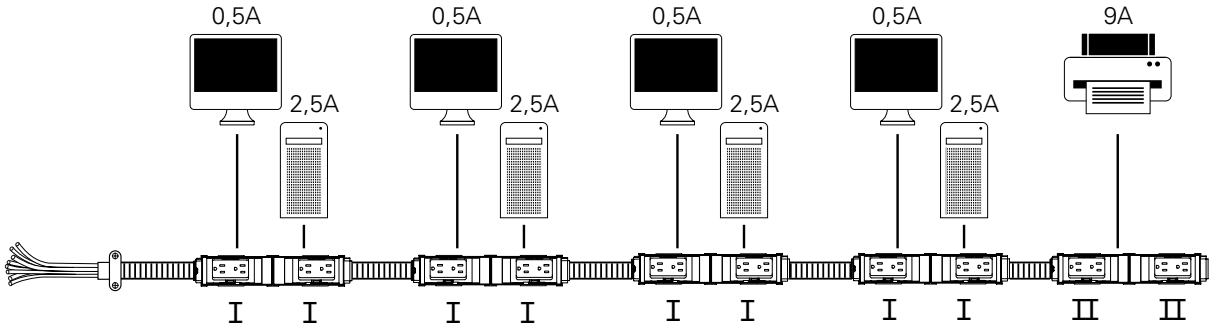

CHICAGO CODE

There is a specific norm about Chicago electrical components. Some of our products are approved, but not all of them.

If you see this logo in Accessories, this means the product is **NOT** approved in Chicago. More info here.

Appendix I: Calculation / Use of Electrical Components

8 Wire, 4 Circuit (3+1) Power Block

- Duplex are interchangable permitting any required circuit combination;
- Blocks for single or double sided applications;
- Complies with National Electric Code;
- UL Listed/Recognized.

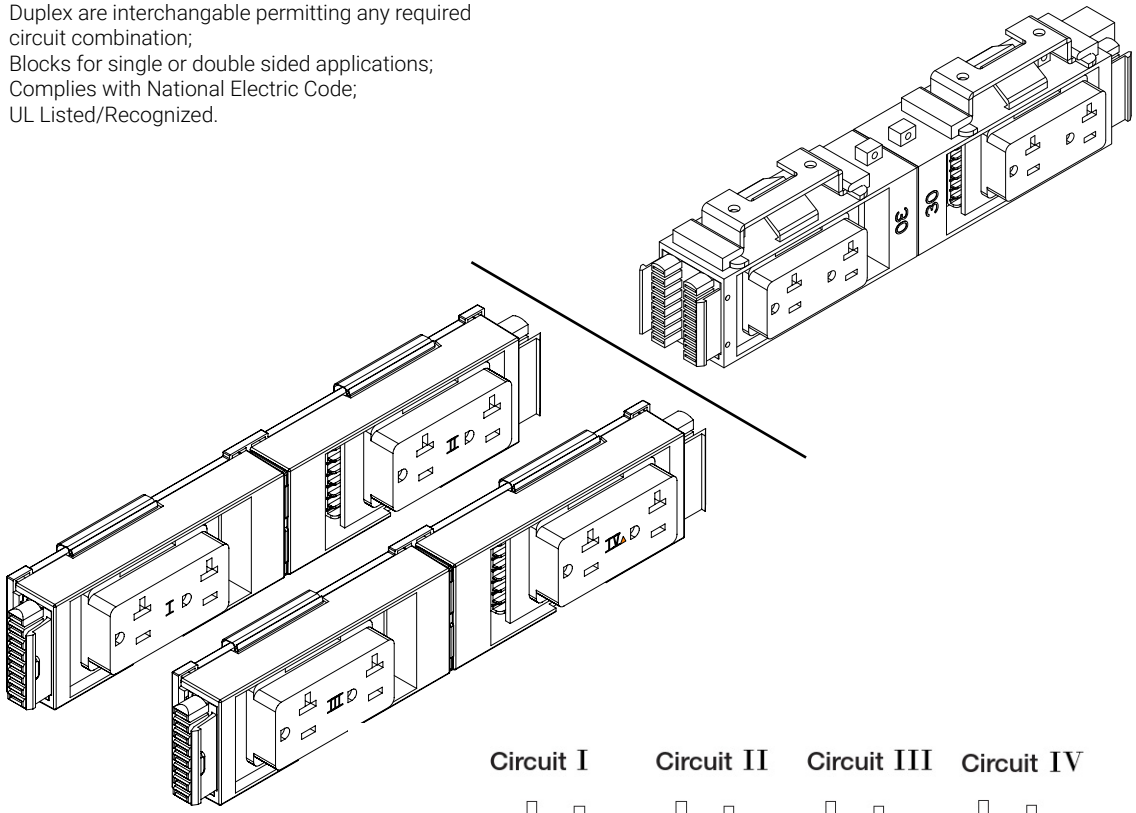

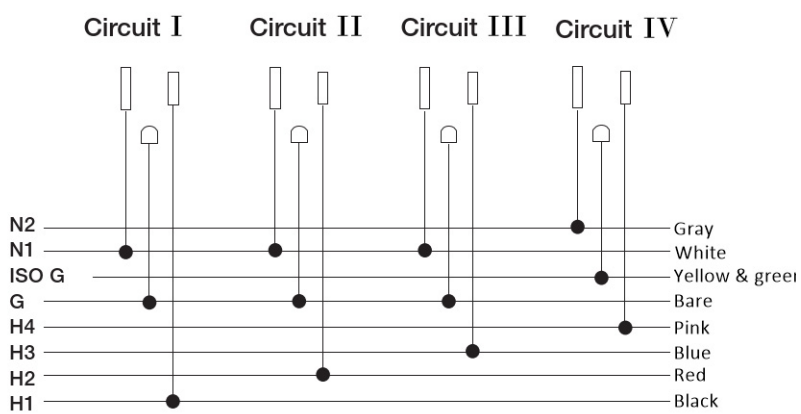

Starter Cable with Hardwire

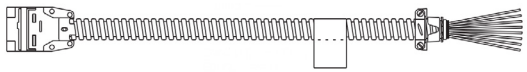

- 4 circuit starter cable with hardwire at one end;
- 4 circuits rated for 20 AMP each;
- Available in lengths from 12"to 180";
- Whip end to be connected to building power by an electrican.

Starter Cable with Plug

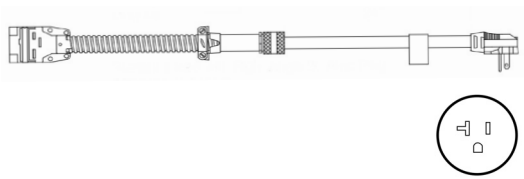

- 1 circuit starter cable with 20A electrical plug;
- Circuit rated for 20 AMP;
- Available in lengths from 36"to 180".

Junction Cable

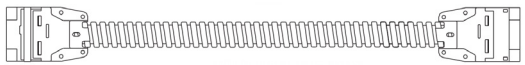

- 4 circuit cord;
- All circuits rated for 20 AMP;
- Available in lengths from 12"to 216".

Desks

Shells (Empty Desks)

BV

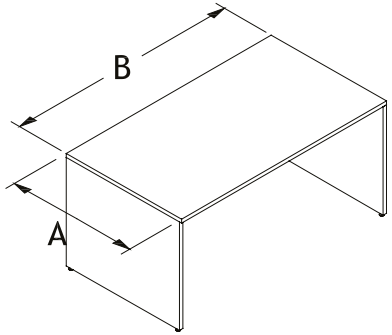

Manufacturing Standards

- Delivered disassembled;
- Modesty;
- Height: 29".

Recessed Modesty:
4-5/8" modesty recess for 30" desks
6" modesty recess for 36" desks

If choice of modesty is not specified, the standard (FM) will be used, PM and SM modesties are available at no extra charge.

Options

Modesty

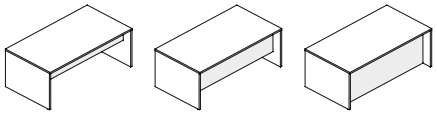

10" high	18-1/2" high	Full height
PM	SM	FM
$0	$0	$0

Grommet Position

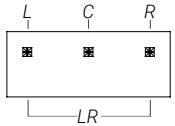

Grommet Style

ELPF	C_PF
$0	$28 ea.

Prices

Dimensions A B	MA	MAL
3048	946	1200
3060	1028	1375
3066	1112	1481
3072	1166	1564
3660	1134	1526
3666	1208	1634
3672	1283	1749

How to Order

	MA MAL	AB	PM SM **FM (std)**	GRL GRR GLR GRC	CAPF CBPF CCPF **ELPF (std)**
	series	dimensions	modesty	grommet position	grommet style
Example	MA	3060	FM	GRC	ELPF

Desk with Convex Front

BCX

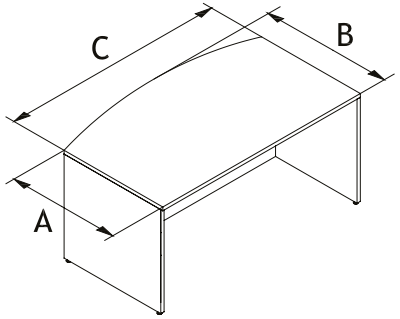

Manufacturing Standards

- Modesty;
- Height: 29".

Recessed Modesty:
Flush modesty for 24" desks
4-5/8" modesty recess for 30" desks
6" modesty recess for 36" desks

If choice of modesty is not specified, the standard (FM) will be used, PM and SM modesties are available at no extra charge.

Options

Modesty Styles

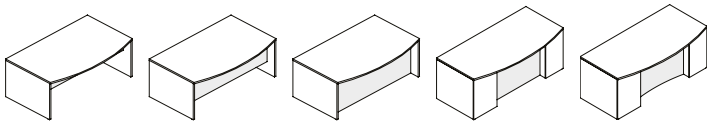

10" high	18-1/2" high	Full height	Minister Front	Curved Minister
PM	SM	FM	MID	MIDC
$0	$0	$0	$103	$206

Grommet Position

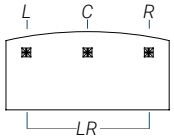

Grommet Style

ELPF	C_PF
$0	$28 ea.

Prices

Dimensions A B C	MA	MAL
243060	1143	1400
243066	1183	1454
243072	1239	1539
303660	1226	1587
303666	1311	1690
303672	1367	1774
364260	1335	1735
364266	1408	1845
364272	1480	1959

How to Order

	MA MAL	ABC		MIDC MID PM SM **FM (std)**	GRL GRR GLR GRC	CAPF CBPF CCPF **ELPF (std)**
			CX			
	série	dimensions	code	modestie	position passe-fils	passe-fils
Exemple	MA	243060	**CX**	FM	GRC	ELPF

Desks with E or F Pedestal on Left

BEL

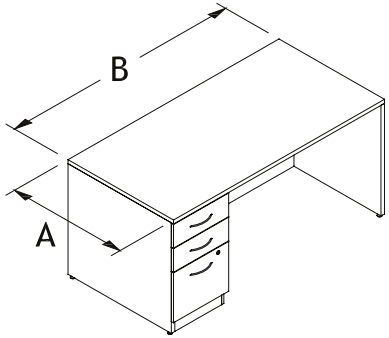

BFL

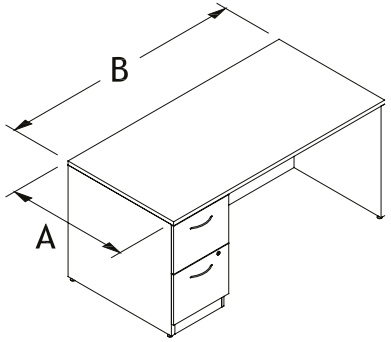

Manufacturing Standards

- E = 2 utility drawers and 1 file drawer;
- F = 2 file drawers;
- HJAB handles;
- Lock;
- Modesty;
- Height: 29".

Recessed Modesty:
4-5/8" modesty recess for 30" desks
6" modesty recess for 36" desks

If choice of modesty is not specified, the standard (FM) will be used, PM and SM modesties are available at no extra charge.

Handles: *For handles other than HJAB standard, please choose from the Logiflex list at no extra charge.*

Options

Modesty Styles

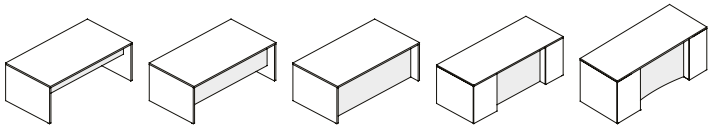

10" high	18-1/2" high	Full height	Minister Front	Curved Minister
PM	SM	FM	MID	MIDC
$0	$0	$0	$103	$206

Grommet Position

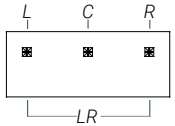

Grommet Style

ELPF	C_PF
$0	$28 ea.

Prices

Dimensions A B	MA	MAL
3060	1814	2228
3066	1888	2333
3072	1941	2417
3084	2025	2553
3660	1909	2377
3666	1982	2488
3672	2058	2597
3684	2203	2821

How to Order

	MA MAL	E F	AB	MIDC MID PM SM **FM (std)**	GRL GRR GLR GRC	CAPF CBPF CCPF **ELPF (std)**	**HJAB (std)**
	series	pedestal	dimensions	modesty	grommet position	grommet style	handles (p. 110)
Example	MA	E	3060	FM	GRC	ELPF	HJAB

Desks with E or F Pedestal on Right

BER

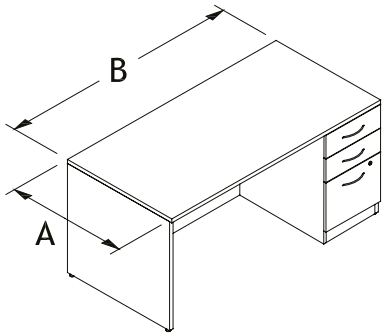

BFR

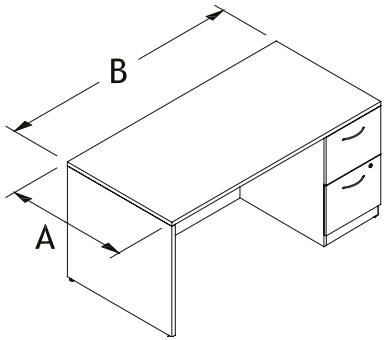

Manufacturing Standards

- E = 2 utility drawers and 1 file drawer;
- F = 2 file drawers;
- HJAB handles;
- Lock;
- Modesty;
- Height: 29".

Recessed Modesty:
4-5/8" modesty recess for 30" desks
6" modesty recess for 36" desks

If choice of modesty is not specified, the standard (FM) will be used, PM and SM modesties are available at no extra charge.

Handles: *For handles other than HJAB standard, please choose from the Logiflex list at no extra charge.*

Options

Modesty Styles

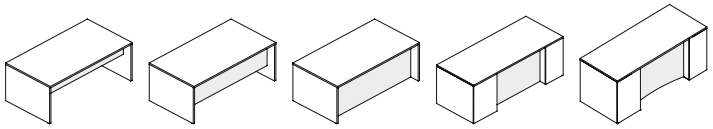

10" high	18-1/2" high	Full height	Minister Front	Curved Minister
PM	SM	FM	MID	MIDC
$0	$0	$0	$103	$206

Grommet Position

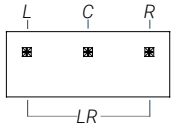

Grommet Style

ELPF	C_PF
$0	$28 ea.

Prices

Dimensions A B	MA	MAL
3060	1814	2228
3066	1888	2333
3072	1941	2417
3084	2025	2553
3660	1909	2377
3666	1982	2488
3672	2058	2597
3684	2203	2821

How to Order

	MA MAL	AB	E F	MIDC MID PM SM **FM (std)**	GRL GRR GLR GRC	CAPF CBPF CCPF **ELPF (std)**	**HJAB (std)**
	series	dimensions	pedestal	modesty	grommet position	grommet style	handles (p. 110)
Example	MA	3060	E	FM	GRC	ELPF	HJAB

Desks with E or F Pedestal on Left and Right

BEF

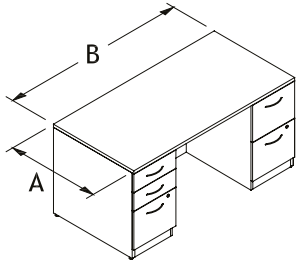

BFE

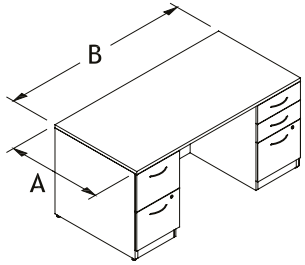

BEE

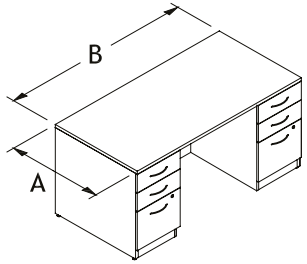

Manufacturing Standards

- E = 2 utility drawers and 1 file drawer;
- F = 2 file drawers;
- HJAB handles;
- Locks;
- Modesty;
- Height: 29".

Recessed Modesty:
4-5/8" modesty recess for 30" desks
6" modesty recess for 36" desks

If choice of modesty is not specified, the standard (FM) will be used, PM and SM modesties are available at no extra charge.

Handles: *For handles other than HJAB standard, please choose from the Logiflex list at no extra charge.*

Options

Modesty Styles

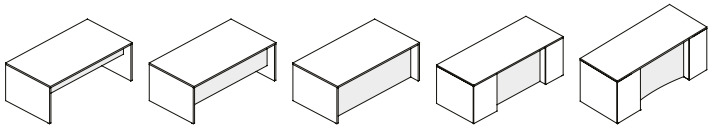

10" high	18-1/2" high	Full height	Minister Front	Curved Minister
PM	SM	FM	MID	MIDC
$0	$0	$0	$103	$206

Grommet Position

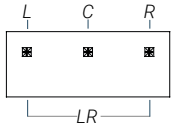

Grommet Style

ELPF	C_PF
$0	$28 ea.

Prices

Dimensions A B	MA	MAL
3060	2586	3079
3066	2660	3181
3072	2711	3265
3084	2799	3403
3660	2678	3229
3666	2754	3329
3672	2829	3448
3684	2979	3670

How to Order

	MA MAL	E F	AB	E F	MIDC MID PM SM **FM (std)**	GRL GRR GLR GRC	CAPF CBPF CCPF **ELPF (std)**	**HJAB (std)**
	series	left pedestal	dimensions	right pedestal	modesty	grommet position	grommet style	handles (p. 110)
Example	MA	E	3060	E	FM	GRC	ELPF	HJAB

Returns

Empty Returns

RVL

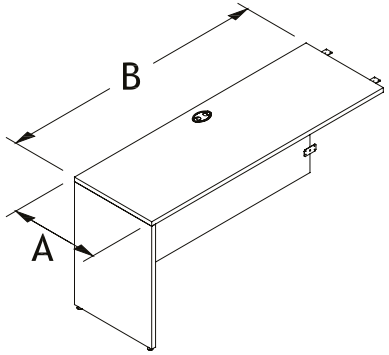

RVR

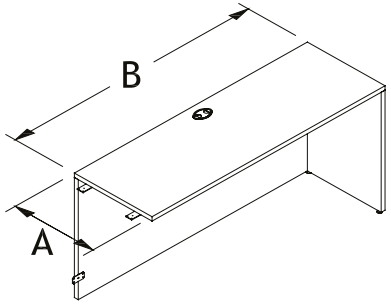

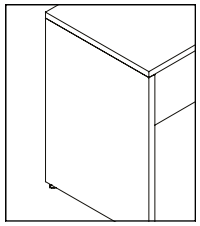

Modesty edge is not visible on the side of the return

Manufacturing Standards

- Delivered disassembled;
- Centered ELPF grommet;
- Flush plates;
- Flush modesty;
- Height: 29".

Not compatible with lateral tables due to differences in the direction of the wood grain as well as the thickness of the modesty panel.

It is not recommended to place a freestanding hutch on a return if the hutch is the same length as the return.

Modesty: *If choice of modesty is not specified, the standard (FM) will be used, PM and SM modesties are available at no extra charge.*

Grommet: *If the grommet position is not specified, the standard is centered (GRC).*

Options

Modesty

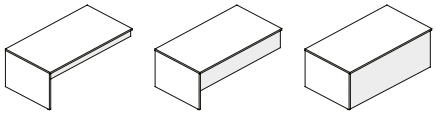

10" high	18-1/2" high	Full height
PM	SM	FM
$0	$0	$0

Grommet Position

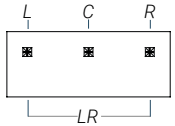

Grommet Style

ELPF	C_PF
$0	$28 ea.

Prices

Dimensions A B	MA	MAL
2030	557	691
2036	597	745
2042	636	814
2048	687	879
2054	731	937
2060	771	1001
2430	637	777
2436	691	847
2442	734	918
2448	791	988
2454	830	1056
2460	888	1126

How to Order

	MA MAL	AB	L R		PM SM **FM (std)**	NGR GRL GRR GLR **GRC (std)**	CAPF CBPF CCPF **ELPF (std)**
				29			
	series	dimensions	code	height	modesty	grommet position	grommet style
Example	MA	2060	L	**29**	FM	GRC	ELPF

Reversible Empty Returns

REVL

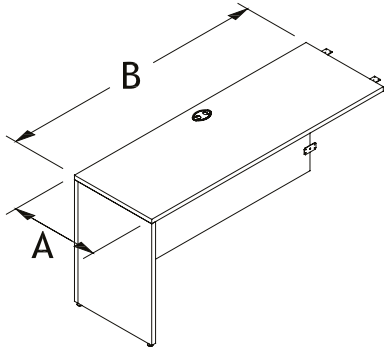

REVR

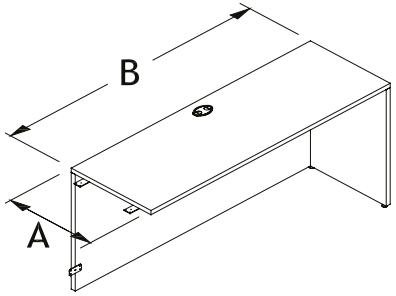

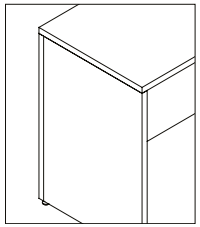

Modesty edge is visible on the side of the return

Manufacturing Standards

- Delivered disassembled;
- Centered ELPF grommet;
- Flush plates;
- Flush modesty;
- Height: 29".

Not compatible with lateral tables due to differences in the direction of the wood grain as well as the thickness of the modesty panel.

It is not recommended to place a freestanding hutch on a return if the hutch is the same length as the return.

Modesty: *If choice of modesty is not specified, the standard (FM) will be used, PM and SM modesties are available at no extra charge.*

Grommet: *If the grommet position is not specified, the standard is centered (GRC).*

Options

Modesty

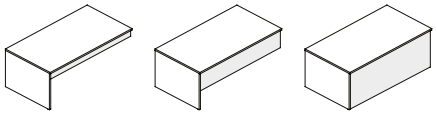

10" high	18-1/2" high	Full height
PM	SM	FM
$0	$0	$0

Grommet Position

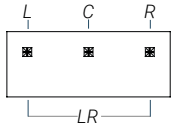

Grommet Style

ELPF	C_PF
$0	$28 ea.

Prices

Dimensions A B	MA	MAL
2030	557	691
2036	597	745
2042	636	814
2048	687	879
2054	731	937
2060	771	1001
2430	637	777
2436	691	847
2442	734	918
2448	791	988
2454	830	1056
2460	888	1126

How to Order

	MA MAL	AB	L R			PM SM **FM (std)**	NGR GRL GRR GLR **GRC (std)**	CAPF CBPF CCPF **ELPF (std)**
				29	**REV**			
	series	dimensions	code	height	code	modesty	grommet position	grommet style
Example	MA	2060	L	**29**	**REV**	FM	GRC	ELPF

Returns with E or F Pedestal on Left

REL

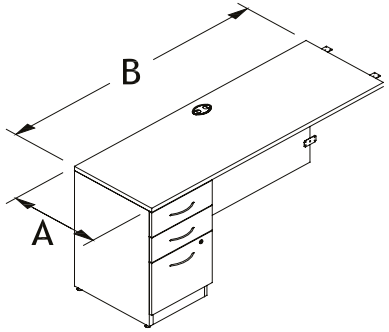

RFL

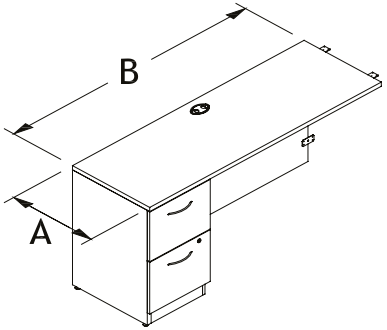

Manufacturing Standards

- E = 2 utility drawers and 1 file drawer;
- F = 2 file drawers;
- Centered ELPF grommet;
- Flush plates;
- Flush modesty;
- HJAB handles;
- Lock;
- Height: 29".

Not compatible with lateral tables due to differences in the direction of the wood grain as well as the thickness of the modesty panel.

It is not recommended to place a freestanding hutch on a return if the hutch is the same length as the return.

Modesty: *If choice of modesty is not specified, the standard (FM) will be used, PM and SM modesties are available at no extra charge.*

Grommet: *If the grommet position is not specified, the standard is centered (GRC).*

Handles: *For handles other than HJAB standard, please choose from the Logiflex list at no extra charge.*

Options

Modesty

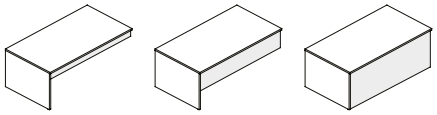

10" high	18-1/2" high	Full height
PM	SM	FM
$0	$0	$0

Grommet Position

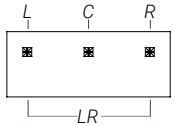

Grommet Style

ELPF	C_PF
$0	$28 ea.

Prices

Dimensions A B	MA	MAL
2030	1292	1502
2036	1337	1556
2042	1376	1624
2048	1426	1689
2054	1466	1746
2060	1502	1810
2430	1353	1576
2436	1392	1643
2442	1433	1697
2448	1477	1766
2454	1525	1836
2460	1566	1902

How to Order

	MA MAL	E F	AB			PM SM **FM (std)**	NGR GRL GRR GLR **GRC (std)**	CAPF CBPF CCPF **ELPF (std)**	**HJAB (std)**
				L	**29**				
	series	pedestal	dimensions	code	height	modesty	grommet position	grommet style	handles (p. 110)
Example	MA	E	2060	**L**	**29**	FM	GRC	ELPF	HJAB

Returns with E or F Pedestal on Right

RER

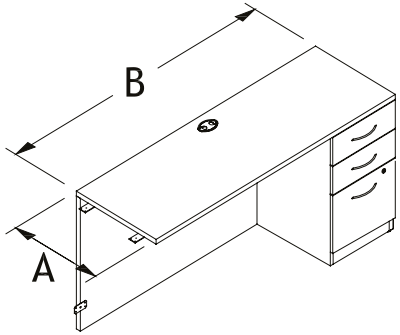

RFR

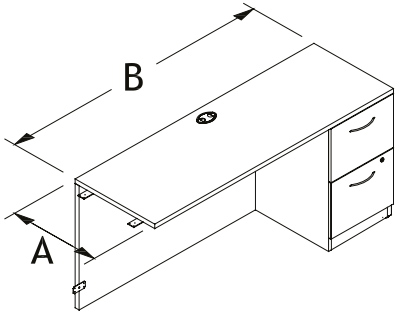

Manufacturing Standards

- E = 2 utility drawers and 1 file drawer;
- F = 2 file drawers;
- Centered ELPF grommet;
- Flush plates;
- Flush modesty;
- HJAB handles;
- Lock;
- Height: 29".

Not compatible with lateral tables due to differences in the direction of the wood grain as well as the thickness of the modesty panel.

It is not recommended to place a freestanding hutch on a return if the hutch is the same length as the return.

Modesty: *If choice of modesty is not specified, the standard (FM) will be used, PM and SM modesties are available at no extra charge.*

Grommet: *If the grommet position is not specified, the standard is centered (GRC).*

Handles: *For handles other than HJAB standard, please choose from the Logiflex list at no extra charge.*

Options

Modesty

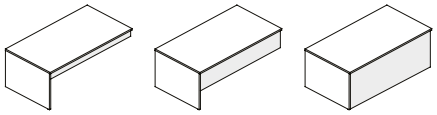

10" high	18-1/2" high	Full height
PM	SM	FM
$0	$0	$0

Grommet Position

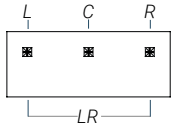

Grommet Style

ELPF	C_PF
$0	$28 ea.

Prices

Dimensions A B	MA	MAL
2030	1292	1502
2036	1337	1556
2042	1376	1624
2048	1426	1689
2054	1466	1746
2060	1502	1810
2430	1353	1576
2436	1392	1643
2442	1433	1697
2448	1477	1766
2454	1525	1836
2460	1566	1902

How to Order

	MA MAL	AB			E F	PM SM **FM (std)**	NGR GRL GRR GLR **GRC (std)**	CAPF CBPF CCPF **ELPF (std)**	**HJAB (std)**
			R	**29**					
	series	dimensions	code	height	pedestal	modesty	grommet position	grommet style	handles (p. 110)
Example	MA	2060	**R**	**29**	E	FM	GRC	ELPF	HJAB

Returns with Combination Pedestal on Left

RCBCL

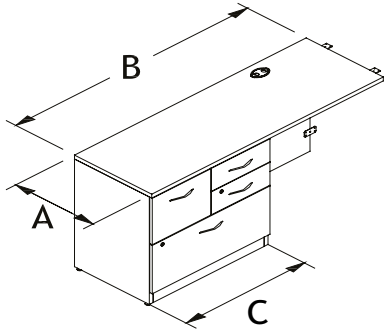

Manufacturing Standards

- 2 utility drawers, one file drawer and one lateral file drawer;
- ELPF grommet;
- Flush plates;
- 2 crossbars;
- HJAB handles;
- Locks;
- Flush modesty;
- Height: 29".

Not compatible with lateral tables due to differences in the direction of the wood grain as well as the thickness of the modesty panel.

It is not recommended to place a freestanding hutch on a return if the hutch is the same length as the return.

Modesty: *If choice of modesty is not specified, the standard (FM) will be used, PM and SM modesties are available at no extra charge.*

Grommet: *If the grommet position is not specified, the standard is centered on the remaining space (GRC).*

Handles: *For handles other than HJAB standard, please choose from the Logiflex list at no extra charge.*

Options

Modesty

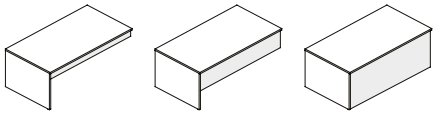

10" high	18-1/2" high	Full height
PM	SM	FM
$0	$0	$0

Grommet Position

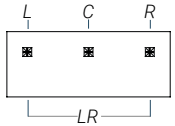

Grommet Style

ELPF	C_PF
$0	$28 ea.

Prices

Dimensions A B C	MA	MAL
204230	2098	2417
204830	2153	2503
205430	2203	2568
206030	2262	2635
244230	2153	2496
244830	2203	2575
245430	2269	2667
246030	2335	2752
204836	2269	2635
205436	2319	2693
206036	2375	2761
244836	2319	2705
245436	2382	2799
246036	2448	2880

How to Order

	MA MAL		C	AB			PM SM **FM (std)**	NGR GRL GRR GLR **GRC (std)**	CAPF CBPF CCPF **ELPF (std)**	**HJAB (std)**
		CBCL			**L**	**29**				
	series	pedestal	pedestal width	dimensions	code	height	modesty	grommet position	grommet style	handles (p. 110)
Example	MA	**CBCL**	30	2060	**L**	**29**	FM	GRC	ELPF	HJAB

Returns with Combination Pedestal on Right

RBCCL

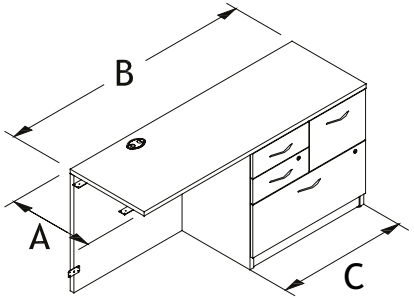

Manufacturing Standards

- 2 utility drawers, one file drawer and one lateral file drawer;
- ELPF grommet;
- Flush plates;
- 2 crossbars;
- HJAB handles;
- Locks;
- Flush modesty;
- Height: 29".

Not compatible with lateral tables due to differences in the direction of the wood grain as well as the thickness of the modesty panel.

It is not recommended to place a freestanding hutch on a return if the hutch is the same length as the return.

Modesty: *If choice of modesty is not specified, the standard (FM) will be used, PM and SM modesties are available at no extra charge.*

Grommet: *If the grommet position is not specified, the standard is centered on the remaining space (GRC).*

Handles: *For handles other than HJAB standard, please choose from the Logiflex list at no extra charge.*

Options

Modesty

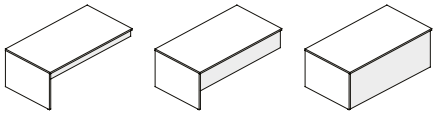

10" high	18-1/2" high	Full height
PM	SM	FM
$0	$0	$0

Grommet Position

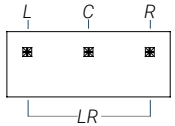

Grommet Style

ELPF	C_PF
$0	$28 ea.

How to Order

	MA MAL	AB				C	PM SM **FM (std)**	NGR GRL GRR GLR **GRC (std)**	CAPF CBPF CCPF **ELPF (std)**	**HJAB (std)**
			R	**29**	**BCCL**					
	series	dimensions	code	height	right pedestal	pedestal width	modesty	grommet position	grommet style	handles (p. 110)
Example	MA	2060	**R**	**29**	**BCCL**	30	FM	GRC	ELPF	HJAB

Prices

Dimensions A B C	MA	MAL
204230	2098	2417
204830	2153	2503
205430	2203	2568
206030	2262	2635
244230	2153	2496
244830	2203	2575
245430	2269	2667
246030	2335	2752
204836	2269	2635
205436	2319	2693
206036	2375	2761
244836	2319	2705
245436	2382	2799
246036	2448	2880

Returns with Lateral File Drawers on Left

RCLL

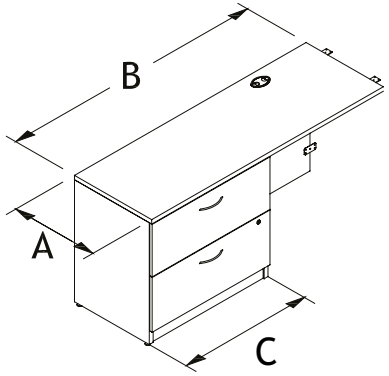

Manufacturing Standards

- 2 lateral file drawers;
- ELPF grommet;
- Flush plates;
- 2 crossbars per file drawer;
- HJAB handles;
- Lock;
- Flush modesty;
- Height: 29".

Not compatible with lateral tables due to differences in the direction of the wood grain as well as the thickness of the modesty panel.

It is not recommended to place a freestanding hutch on a return if the hutch is the same length as the return.

Modesty: *If choice of modesty is not specified, the standard (FM) will be used, PM and SM modesties are available at no extra charge.*

Grommet: *If the grommet position is not specified, the standard is centered on the remaining space (GRC).*

Handles: *For handles other than HJAB standard, please choose from the Logiflex list at no extra charge.*

Options

Modesty

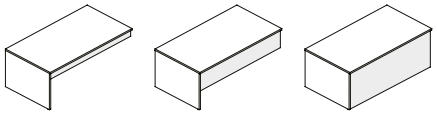

10" high	18-1/2" high	Full height
PM	SM	FM
$0	$0	$0

Grommet Position

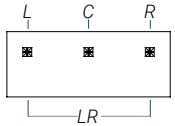

Grommet Style

ELPF	C_PF
$0	$28 ea.

How to Order

	MA MAL		C	AB			PM SM **FM (std)**	NGR GRL GRR GLR **GRC (std)**	CAPF CBPF CCPF **ELPF (std)**	**HJAB (std)**
		CL			**L**	**29**				
	series	pedestal	pedestal width	dimensions	code	height	modesty	grommet position	grommet style	handles (p. 110)
Example	MA	**CL**	30	2060	**L**	**29**	FM	GRC	ELPF	HJAB

Prices

Dimensions A B C	MA	MAL
204230	1534	1806
204830	1593	1876
205430	1651	1958
206030	1706	2027
244230	1621	1925
244830	1684	1995
245430	1733	2065
246030	1771	2137
204836	1694	1995
205436	1760	2075
206036	1814	2144
244836	1760	2087
245436	1824	2165
246036	1877	2246
205442	1888	2213
206042	1941	2287
245442	1951	2308
246042	2001	2383

Returns with Lateral File Drawers on Right

RCLR

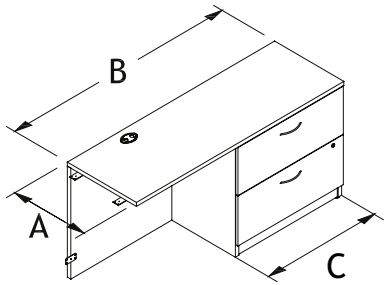

Manufacturing Standards

- 2 lateral file drawers;
- ELPF grommet;
- Flush plates;
- 2 crossbars per file drawer;
- HJAB handles;
- Lock;
- Flush modesty;
- Height: 29".

Not compatible with lateral tables due to differences in the direction of the wood grain as well as the thickness of the modesty panel.

It is not recommended to place a freestanding hutch on a return if the hutch is the same length as the return.

Modesty: *If choice of modesty is not specified, the standard (FM) will be used, PM and SM modesties are available at no extra charge.*

Grommet: *If the grommet position is not specified, the standard is centered on the remaining space (GRC).*

Handles: *For handles other than HJAB standard, please choose from the Logiflex list at no extra charge.*

Options

Modesty

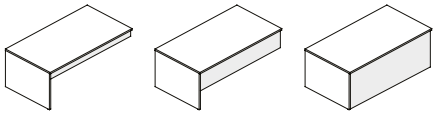

10" high	18-1/2" high	Full height
PM	SM	FM
$0	$0	$0

Grommet Position

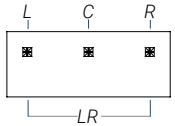

Grommet Style

ELPF	C_PF
$0	$28 ea.

How to Order

	MA MAL	AB				C	PM SM **FM (std)**	NGR GRL GRR GLR **GRC (std)**	CAPF CBPF CCPF **ELPF (std)**	**HJAB (std)**
			R	**29**	**CL**					
	series	dimensions	code	height	pedestal	width	modesty	grommet position	grommet style	handles (p. 110)
Example	MA	2060	**R**	**29**	**CL**	30	FM	GRC	ELPF	HJAB

Prices

Dimensions A B C	MA	MAL
204230	1534	1806
204830	1593	1876
205430	1651	1958
206030	1706	2027
244230	1621	1925
244830	1684	1995
245430	1733	2065
246030	1771	2137
204836	1694	1995
205436	1760	2075
206036	1814	2144
244836	1760	2087
245436	1824	2165
246036	1877	2246
205442	1888	2213
206042	1941	2287
245442	1951	2308
246042	2001	2383

Returns with Cabinet on Left

RARL

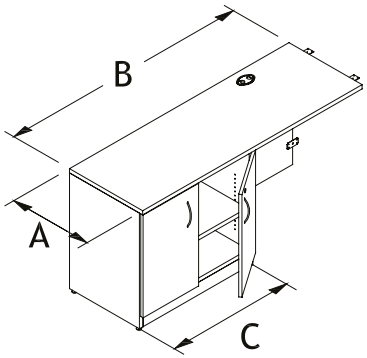

Manufacturing Standards

- 2 door cabinet;
- One adjustable shelf;
- ELPF grommet;
- Flush plates;
- HJAB handles;
- Lock;
- Flush modesty;
- Height: 29".

Not compatible with lateral tables due to differences in the direction of the wood grain as well as the thickness of the modesty panel.

It is not recommended to place a freestanding hutch on a return if the hutch is the same length as the return.

Modesty: *If choice of modesty is not specified, the standard (FM) will be used, PM and SM modesties are available at no extra charge.*

Grommet: *If the grommet position is not specified, the standard is centered on the remaining space (GRC).*

Handles: *For handles other than HJAB standard, please choose from the Logiflex list at no extra charge.*

Adjustable shelves (SH): *see Appendix G for prices, p. 16*

Options

Modesty

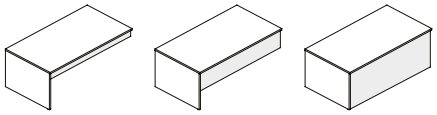

10" high	18-1/2" high	Full height
PM	SM	FM
$0	$0	$0

Grommet Position

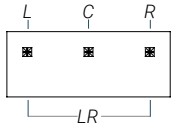

Grommet Style

ELPF	C_PF
$0	$28 ea.

Adjustable Shelves

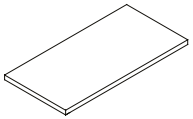

SH

Prices

Dimensions A B C	MA	MAL
204230	1357	1594
204830	1391	1639
205430	1426	1687
206030	1470	1762
244230	1426	1687
244830	1456	1730
245430	1489	1782
246030	1532	1854
204836	1435	1687
205436	1470	1730
206036	1513	1805
244836	1456	1730
245436	1489	1782
246036	1532	1854

How to Order

	MA MAL		C	AB			PM SM **FM (std)**	NGR GRL GRR GLR **GRC (std)**	CAPF CBPF CCPF **ELPF (std)**	**HJAB (std)**	SH
		AR			**L**	**29**					
	series	cabinet	cabinet width	dimensions	code	height	modesty	grommet position	grommet style	handles (p. 110)	shelves
Example	MA	**AR**	30	2060	**L**	**29**	FM	GRC	ELPF	HJAB	SH

Returns with Cabinet on Right

RARR

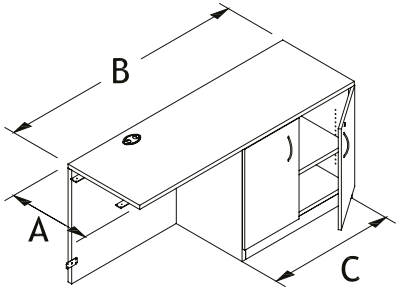

Manufacturing Standards

- 2 door cabinet;
- One adjustable shelf;
- ELPF grommet;
- Flush plates;
- HJAB handles;
- Lock;
- Flush modesty;
- Height: 29".

Not compatible with lateral tables due to differences in the direction of the wood grain as well as the thickness of the modesty panel.

It is not recommended to place a freestanding hutch on a return if the hutch is the same length as the return.

Modesty: *If choice of modesty is not specified, the standard (FM) will be used, PM and SM modesties are available at no extra charge.*

Grommet: *If the grommet position is not specified, the standard is centered on the remaining space (GRC).*

Handles: *For handles other than HJAB standard, please choose from the Logiflex list at no extra charge.*

Adjustable shelves (SH): *see Appendix G for prices, p. 16*

Options

Modesty

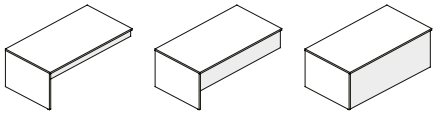

10" high	18-1/2" high	Full height
PM	SM	FM
$0	$0	$0

Grommet Position

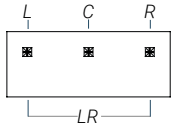

Grommet Style

ELPF	C_PF
$0	$28 ea.

Adjustable Shelves

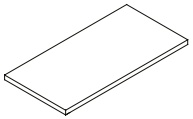

SH

Prices

Dimensions A B C	MA	MAL
204230	1357	1594
204830	1391	1639
205430	1426	1687
206030	1470	1762
244230	1426	1687
244830	1456	1730
245430	1489	1782
246030	1532	1854
204836	1435	1687
205436	1470	1730
206036	1513	1805
244836	1456	1730
245436	1489	1782
246036	1532	1854

How to Order

	MA MAL	AB				C	PM SM **FM (std)**	NGR GRL GRR GLR **GRC (std)**	CAPF CBPF CCPF **ELPF (std)**	**HJAB (std)**	SH
			R	**29**	**AR**						
	series	dimensions	code	height	cabinet	cabinet width	modesty	grommet position	grommet style	handles (p. 110)	shelves
Example	MA	2060	**R**	**29**	**AR**	30	FM	GRC	ELPF	HJAB	SH

Bridges with Modesty

BR

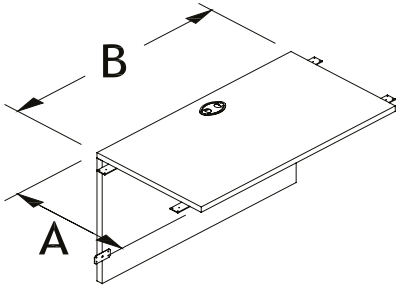

Manufacturing Standards

- Delivered disassembled;
- ELPF grommet;
- Flush plates;
- Flush modesty.

Not compatible with lateral tables due to differences in the direction of the wood grain as well as the thickness of the modesty panel.

Modesty: *If choice of modesty is not specified, the standard (FM) will be used, PM and SM modesties are available at no extra charge.*

Grommet: *If the grommet position is not specified, the standard is centered (GRC).*

Options

Modesty

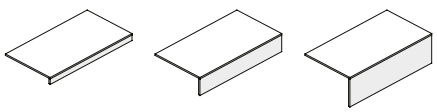

10" high	18-1/2" high	Full height
PM	SM	FM
$0	$0	$0

Grommet Position

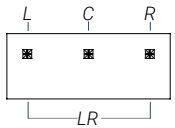

Grommet Style

ELPF	C_PF
$0	$28 ea.

Prices

Dimensions A B	MA	MAL
2036	585	735
2042	605	782
2048	661	852
2436	646	826
2442	668	862
2448	720	945

How to Order

	MA MAL	AB		PM SM **FM (std)**	NGR GRL GRR GLR **GRC (std)**	CAPF CBPF CCPF **ELPF (std)**
			BR			
	series	dimensions	code	modesty	grommet position	grommet style
Example	MA	2036	**BR**	FM	GRC	ELPF

Bridge Top

BRT

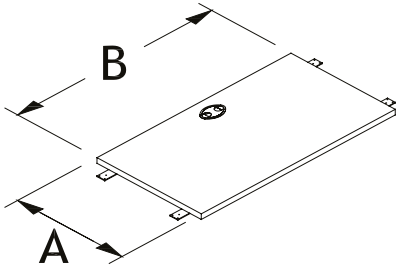

Manufacturing Standards

- ELPF grommet;
- Flush plates.

Grommet: *If the grommet position is not specified, the standard is centered (GRC).*

Options

Grommet Position

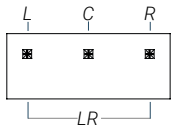

Grommet Style

ELPF
$0

C_PF
$28 ea.

Prices

Dimensions A B	MA	MAL
2036	212	331
2042	245	383
2048	275	446
2436	247	396
2442	287	456
2448	319	517

How to Order

	MA MAL	AB		NGR GRL GRR GLR **GRC (std)**	CAPF CBPF CCPF **ELPF (std)**
			BRT		
	series	dimensions	code	grommet position	grommet style
Example	MA	2036	**BRT**	GRC	ELPF

Connection Tops

TRTOP

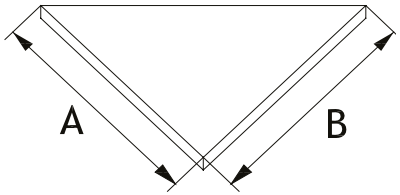

Manufacturing Standards

- Flush plates.

Prices

Dimensions A B	MA	MAL
1313	61	94
1818	111	167
1820	111	167
1824	119	177
1830	174	264
1836	185	274
2020	119	177
2024	142	214
2030	185	274
2036	208	308
2424	174	264
2430	208	308
2436	240	357
3030	271	404
3036	304	450
3636	380	571

How to Order

	MA MAL	AB	
			TRTOP
	series	dimensions	code
Example	MA	2020	TRTOP

Tables

Rectangular Tables without End Gable

REI

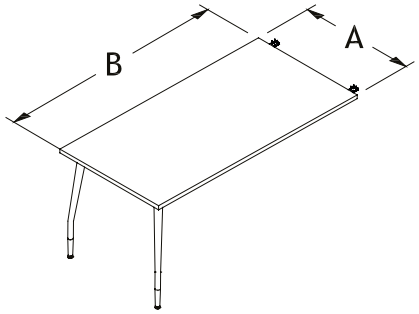

Manufacturing Standards

- Delivered disassembled;
- 2 Hatley legs: chrome tapered legs with wood insert;
- Flush plates;
- Height: 29".

Table to be attached to the top of another freestanding item.

Wood finishes: *Available colors: White Wash **WW**, Golden Wheat **GW**, Sand **SD**, Apricot **AT**, Pecan **PN**, Brandy **BR**, Chestnut **CT**, Coffee **CF**, Espresso **ES**, Bordeaux **BO**, Black Wash **BW** and Bark **BK**.*

Legs: *If choice of the leg is not specified, the standard is 2 Hatley legs.*

4.5SN, no charge;
IFNBL / SN, subtract $81 retail from table price;
MAGSN, add $316 retail to table price;
MAGCHR, add $799 retail to table price.
MAGBL, add $316 retail to table price;
MAGWH, add $316 retail to table price;

Prices

Dimensions A	B	MA	MAL
3054		997	1278
3060		1009	1302
3066		1071	1407
3072		1112	1499
3660		1112	1499
3666		1166	1578
3672		1238	1697
3684		1451	1992

How to Order

	MA MAL	AB	REI IRE	4.5BL /4.5SN IFNBL / SN MAGSN / CHR / BL / WH HATSN / HATBL **HATCHR (std)**
	series	dimensions	code	legs (p. 111)
Example	MA	3060	REI	HATCHR

Rectangular Tables without End Gable

REIO

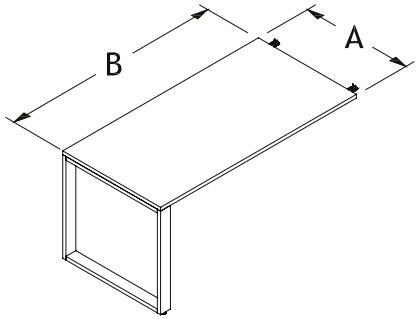

Manufacturing Standards

- Delivered disassembled;
- Square leg in Satin Nickel;
- Support bar;
- Flush plates;
- Height: 29".

Table to be attached to the top of another freestanding item.

Prices

Dimensions A	B	MA	MAL
3054		997	1278
3060		1009	1302
3066		1071	1407
3072		1112	1499
3660		1112	1499
3666		1166	1578
3672		1238	1697
3684		1451	1992

How to Order

	MA MAL	AB		WH BL **SN (std)**
			REIO	
	series	dimensions	code	finish
Example	MA	3060	**REIO**	SN

Rectangular Tables with End Gable

REG

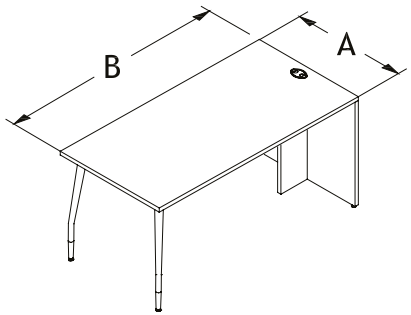

Manufacturing Standards

- Delivered disassembled;
- 2 Hatley legs: chrome tapered legs with wood insert;
- End gable;
- ELPF grommet;
- Flush plates;
- Height: 29".

Freestanding tables.

Not compatible with lateral tables, due to difference in the direction of wood grain and the thickness of the end gable.

Wood finishes: *Available colors: White Wash **WW**, Golden Wheat **GW**, Sand **SD**, Apricot **AT**, Pecan **PN**, Brandy **BR**, Chestnut **CT**, Coffee **CF**, Espresso **ES**, Bordeaux **BO**, Black Wash **BW** and Bark **BK**.*

Legs: *If choice of the leg is not specified, the standard is 2 Hatley legs.*

4.5BL / SN, no charge;
IFNBL / SN, subtract $81 retail from table price;
MAGSN, add $316 retail to table price;
MAGCHR, add $799 retail to table price.

Options

Grommet Style

ELPF
$0

C_PF
$28 ea.

Prices

Dimensions A B	MA	MAL
3060	1155	1499
3066	1218	1594
3072	1261	1664
3084	1368	1825
3660	1284	1687
3666	1339	1769
3672	1411	1884
3684	1620	2171

How to Order

	MA MAL	AB		4.5BL /4.5SN IFNBL / SN MAGSN / CHR HATSN / HATBL **HATCHR (std)**	NGR **GRC (std)**	CAPF CBPF CCPF **ELPF (std)**
			REG			
	series	dimensions	code	legs (p. 111)	grommet position	grommet style
Example	MA	3060	REG	HATCHR	GRC	ELPF

Rectangular Tables with End Gable

REGO

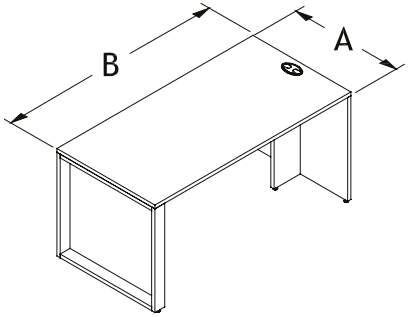

Manufacturing Standards

- Delivered disassembled;
- Square leg in Satin Nickel;
- End gable;
- Support bar;
- ELPF grommet;
- Flush plates;
- Height: 29".

Freestanding tables.

Not compatible with lateral tables, due to difference in the direction of wood grain and the thickness of the end gable.

Options

Grommet Style

ELPF
$0

C_PF
$28 ea.

Prices

Dimensions A	B	MA	MAL
3060		1155	1499
3066		1218	1594
3072		1261	1664
3084		1368	1825
3660		1284	1687
3666		1339	1769
3672		1411	1884
3684		1620	2171

How to Order

	MA MAL	AB		WH BL **SN (std)**	NGR **GRC (std)**	CAPF CBPF CCPF **ELPF (std)**
			REGO			
	series	dimensions	code	finish	grommet position	grommet style
Example	MA	3060	**REGO**	SN	GRC	ELPF

Corner Tables

CT

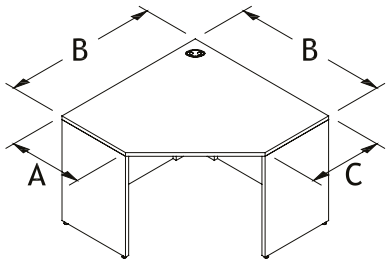

CTC

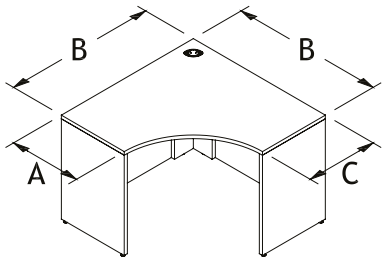

Modesties

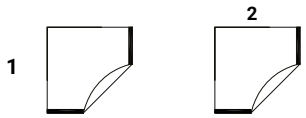

Leg Bases

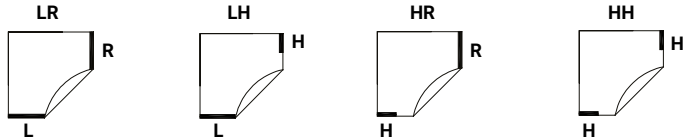

Full Legs | Half Leg on Right | Half Leg on Left | Half Legs

Manufacturing Standards

- Delivered disassembled;
- Corner grommet;
- Flush modesties;
- Height: 29".

Grommet Position: *Additional ELPF grommets at no extra charge.*

Modesty: *If choice of modesty is not specified, the standard (FM) will be used, PM and SM modesties are available at no extra charge.*

Options

Modesty Styles

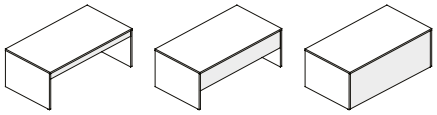

10" high	18-1/2" high	Full height
PM	SM	FM
$0	$0	$0

Grommet Position

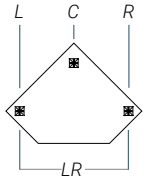

Grommet Style

ELPF	C_PF
$0	$28 ea.

Prices

CT - Corner Table Straight Cut

Dimensions A B C	MA	MAL
203620	1122	1409
204220	1283	1652
204820	1558	2015
244224	1283	1652
244824	1558	2015
304230	1283	1652
304830	1558	2015

CTC - Corner Table Curved Cut

Dimensions A B C	MA	MAL
203620	1122	1409
204220	1283	1652
204820	1558	2015
244224	1283	1652
244824	1558	2015
304230	1283	1652
304830	1558	2015

How to Order

	MA MAL	ABC	CT CTC	LR LH HR HH	PM SM **FM (std)**	PM SM **FM (std)**	NGR GRL GRR GLR **GRC (std)**	CAPF CBPF CCPF **ELPF (std)**
	series	dimensions	code	leg base	modesty 1	modesty 2	grommet position	grommet style
Example	MA	203620	CT	LR	FM	FM	GRC	ELPF

Lateral Tables, 20" and 24"

TL

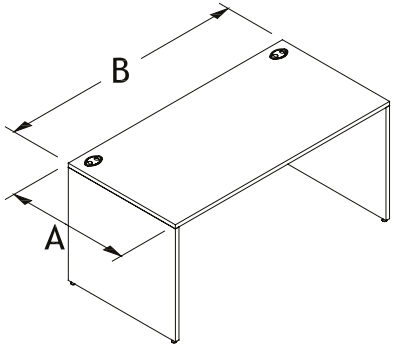

Leg Bases

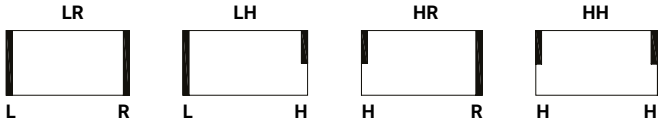

Full Legs | Half Leg on Right with Cable Cutout | Half Leg on Left with Cable Cutout | Half Legs with Cable Cutout

Manufacturing Standards

- Delivered disassembled;
- Centered grommet for table widths less than 48";
- Left and right grommets for table widths 48" or more;
- Flush modesty;
- Height: 29";
- Half leg to juxtapose the table to another table. Not designed to be apparent.

Compatible only with other lateral tables or extended corner tables because of the direction of the wood grain as well as the thickness of the leg base.

Leg Base: *For support purposes, 84" tables include an additional half leg in the centre.*

Modesty: *If choice of modesty is not specified, the standard (FM) will be used, PM and SM modesties are available at no extra charge.*

Fixed Shelves: *a 12" deep shelf can be added 16" below the work surface:*

SH1: *For lateral tables 36" wide or less, add $84 retail;*
SH2: *For lateral tables 42" wide or more, add $114 retail.*

Options

Modesty Styles

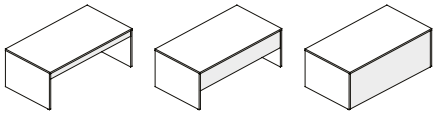

10" high	18-1/2" high	Full height
PM	SM	FM
$0	$0	$0

Grommet Position

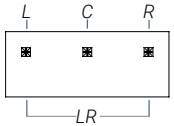

Grommet Style

ELPF	C_PF
$0	$28 ea.

How to Order

	MA MAL	AB		LR LH HR HH	PM SM **FM (std)**	NGR GRL GRR GLR GRC	CAPF CBPF CCPF **ELPF (std)**	SH1 SH2
			TL					
	series	dimensions	code	leg base	modesty	grommet position	grommet style	shelves
Example	MA	2072	**TL**	LR	FM	GRC	ELPF	SH2

Prices

Dimensions A B	MA	MAL
2024	615	735
2030	634	782
2036	711	873
2042	752	933
2048	794	1003
2054	849	1073
2060	881	1121
2066	926	1176
2072	973	1259
2078	1024	1339
2084	1218	1414
2430	699	852
2436	774	945
2442	816	1018
2448	860	1073
2454	912	1143
2460	946	1197
2466	985	1268
2472	1038	1343
2478	1093	1414
2484	1160	1454

Lateral Tables, 30" and 36"

TL

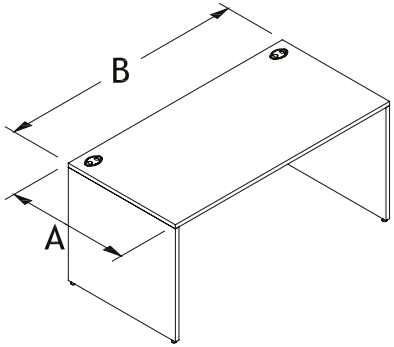

Leg Bases

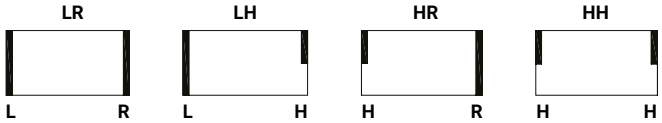

Full Legs | Half Leg on Right with Cable Cutout | Half Leg on Left with Cable Cutout | Half Legs with Cable Cutout

Manufacturing Standards

- Delivered disassembled;
- Centered grommet for table widths less than 48";
- Left and right grommets for table widths 48" or more;
- Flush modesty;
- Height: 29";
- Half leg to juxtapose the table to another table. Not designed to be apparent.

Compatible only with other lateral tables or extended corner tables because of the direction of the wood grain as well as the thickness of the leg base.

Leg Base: *For support purposes, 84" tables include an additional half leg in the centre.*

Modesty: *If choice of modesty is not specified, the standard (FM) will be used, PM and SM modesties are available at no extra charge.*

Fixed Shelves: *a 12" deep shelf can be added 16" below the work surface:*

SH1: *For lateral tables 36" wide or less, add $84 retail;*
SH2: *For lateral tables 42" wide or more, add $114 retail.*

Options

Modesty Styles

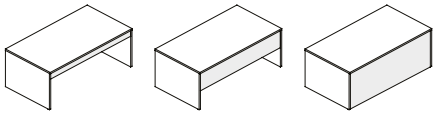

10" high — PM — $0
18-1/2" high — SM — $0
Full height — FM — $0

Grommet Position

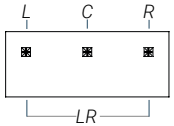

Grommet Style

ELPF — $0
C_PF — $28 ea.

How to Order

	MA MAL	AB		LR LH HR HH	PM SM **FM (std)**	NGR GRL GRR GLR GRC	CAPF CBPF CCPF **ELPF (std)**	SH1 SH2
			TL					
	series	dimensions	code	leg base	modesty	grommet position	grommet style	shelves
Example	MA	3072	**TL**	LR	FM	GRC	ELPF	SH2

Prices

Dimensions A B	MA	MAL
3024	712	852
3030	784	945
3036	860	1038
3042	900	1108
3048	946	1200
3054	996	1290
3060	1028	1375
3066	1112	1481
3072	1166	1564
3078	1249	1654
3084	1326	1726
3630	985	1238
3636	1009	1294
3642	1035	1354
3648	1068	1417
3654	1099	1488
3660	1134	1526
3666	1208	1634
3672	1283	1749
3678	1355	1822
3684	1432	1907

Pedestals and Cabinets

Independent D, E and F Pedestals

DIND

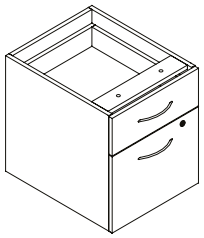

EIND

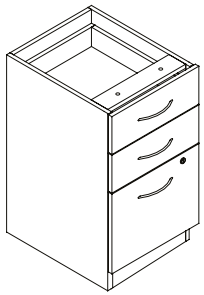

FIND

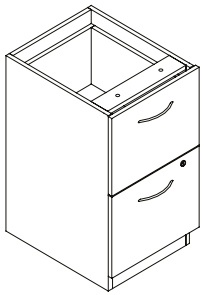

Manufacturing Standards

- Pedestals without tops;
- Depth of 17-3/4";
- D = 1 utility drawer and 1 file drawer;
- E = 2 utility drawers and 1 file drawer;
- F = 2 file drawers;
- HJAB handles;
- Lock.

For installation by client on existing furniture.

Handles: *For handles other than HJAB standard, please choose from the Logiflex list at no extra charge.*

Options

Legal Size

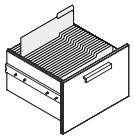

X

Prices

Code	MA
DIND	749
DINDX	838
EIND	935
EINDX	1 019
FIND	935
FINDX	1 019

How to Order

		DIND EIND FIND	X	**HJAB (std)**
	MA			
	series	code	legal size	handles (p. 110)
Example	MA	DIND	X	HJAB

Independent Cabinet with One Door

ARLIND

Door opening to the left

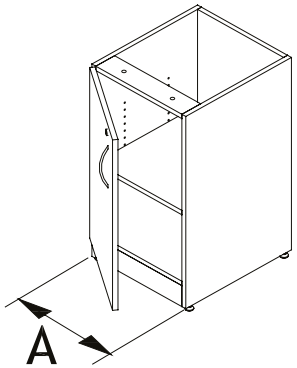

ARRIND

Door opening to the right

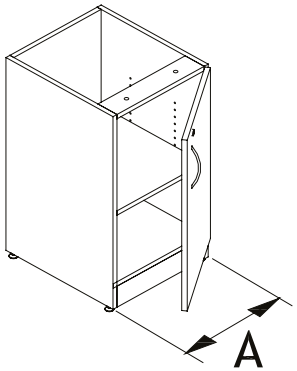

Manufacturing Standards

- Pedestals without tops;
- Depth of 17-3/4";
- 1 adjustable shelf;
- HJAB handle;
- Lock.

For installation by client on existing furniture.

Handle: *For a handle other than HJAB standard, please choose from the Logiflex list at no extra charge.*

Prices

Width A	MA
15	637
18	666

How to Order

		ARL ARR	A		**HJAB (std)**
	MA			**IND**	
	series	code	width	code	handles (p. 110)
Example	MA	ARL	15	**IND**	HJAB

Independent Two Drawer Lateral Filing Cabinet

CLIND

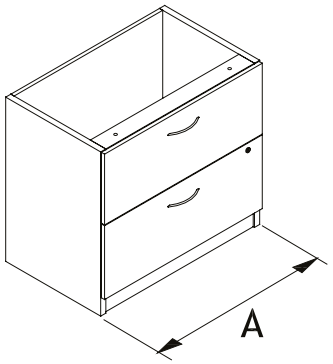

Manufacturing Standards

- Pedestals without tops;
- Depth of 17-3/4";
- 2 lateral filing drawers;
- HJAB handles;
- 2 crossbars per file drawer;
- Lock.

For installation by client on existing furniture.

Handles: *For handles other than HJAB standard, please choose from the Logiflex list at no extra charge.*

Prices

Width A	MA
30	1 071
36	1 164
42	1 255

How to Order

			A		**HJAB (std)**
	MA	**CL**		**IND**	
	series	code	width	code	handles (p. 110)
Example	MA	**CL**	36	**IND**	HJAB

Independent Combination Pedestals

BCCLIND

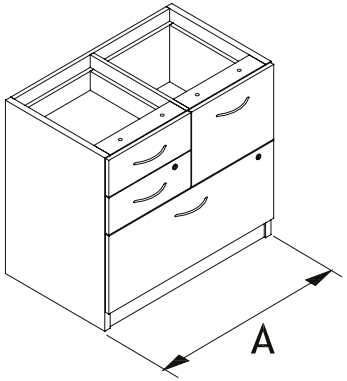

CBCLIND

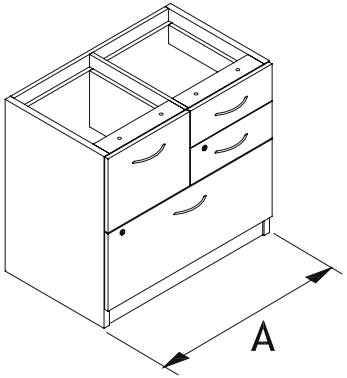

Manufacturing Standards

- Pedestals without tops;
- Depth of 17-3/4";
- HJAB handles;
- 2 crossbars;
- 2 utlilty drawers, 1 filing drawer and 1 lateral filing drawer;
- Locks.

For installation by client on existing furniture.

Handles: *For handles other than HJAB standard, please choose from the Logiflex list at no extra charge.*

Prices

Width A	MA
30	1518
36	1613

How to Order

		BCCL CBCL	A		**HJAB (std)**
	MA			**IND**	
	series	code	width	code	handles (p. 110)
Example	MA	BCCL	36	**IND**	HJAB

Independent Two Door Cabinet

ARIND

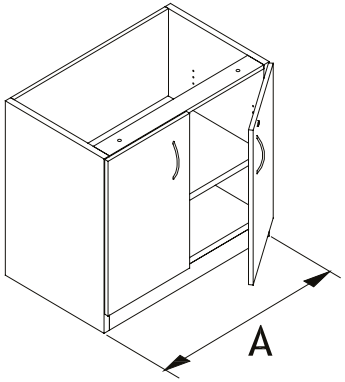

Manufacturing Standards

- Pedestals without tops;
- Depth of 17-3/4";
- 2 door cabinet;
- 1 adjustable shelf;
- HJAB handles;
- Lock.

For installation by client on existing furniture.

Handles: *For handles other than HJAB standard, please choose from the Logiflex list at no extra charge.*

Prices

Width A	MA
24	848
30	908
36	951
42	991

How to Order

			A		**HJAB (std)**
	MA	**AR**		**IND**	
	series	code	width	code	handles (p. 110)
Example	MA	**AR**	36	**IND**	HJAB

Mobile E and F Pedestals - Letter Size

MOBE

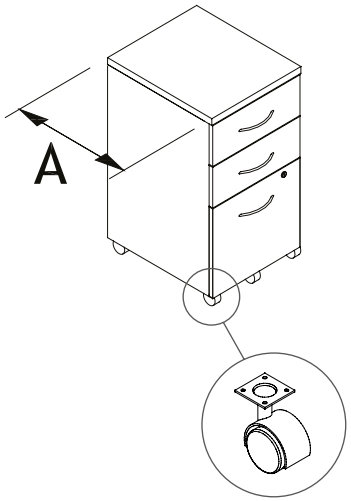

MOBF

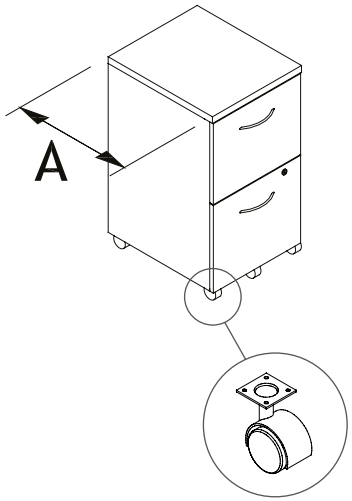

Manufacturing Standards

- Delivered with the casters disassembled;
- E = 2 utility drawers and 1 letter size file drawer;
- F = 2 letter size file drawers;
- HJAB handles;
- Lock;
- 5 casters including 2 with brake;
- Height: 27-3/8".

Handles: *For handles other than HJAB standard, please choose from the Logiflex list at no extra charge.*

Counterweight: *A counterweight is included for pedestals that are 18" deep. If you would like to add a counterweight to a pedestal with a different depth, please indicate option (CPDS).Add $204 .*

Prices

Depth A	MA
18	991
23	991
29	1 062

How to Order

			E F	A	CPDS	**HJAB (std)**
	MA	**MOB**				
	series	code	pedestal	depth	counter weight	handles (p. 110)
Example	MA	**MOB**	E	23	CPDS	HJAB

Mobile E and F Pedestals - Legal Size

MOBXE

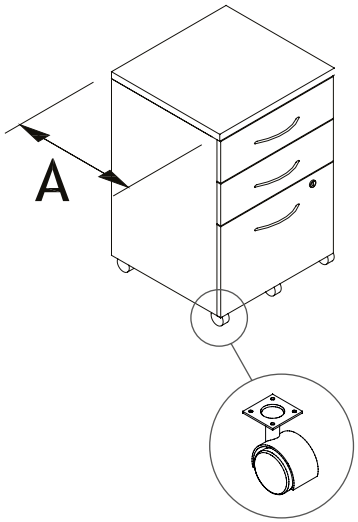

MOBXF

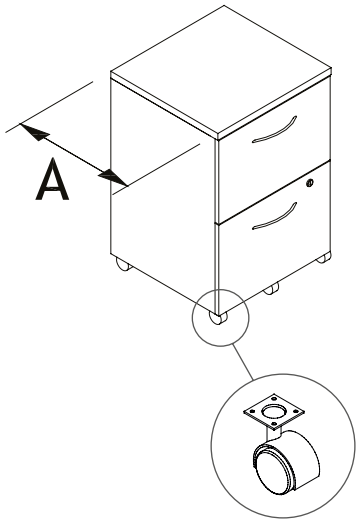

Manufacturing Standards

- Delivered with the casters disassembled;
- E = 2 utility drawers and 1 legal size file drawer;
- F = 2 legal size file drawers;
- HJAB handles;
- Lock;
- 5 casters including 2 with brake;
- Height: 27-3/8".

Handles: *For handles other than HJAB standard, please choose from the Logiflex list at no extra charge.*

Counterweight: *A counterweight is included for pedestals that are 18" deep. If you would like to add a counterweight to a pedestal with a different depth, please indicate option (CPDS).Add $204 .*

Prices

Depth A	MA
18	1 115
23	1 115
29	1 183

How to Order

			E F	A	CPDS	**HJAB (std)**
	MA	**MOBX**				
	series	code	pedestal	depth	counter weight	handles (p. 110)
Example	MA	**MOBX**	E	23	CPDS	HJAB

Combination Pedestals

PBCCL

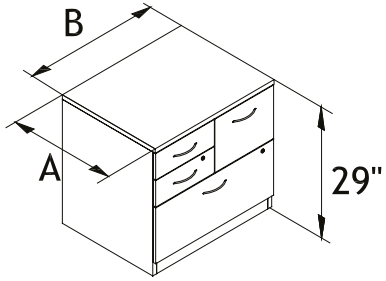

PCBCL

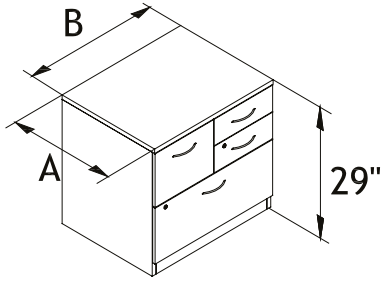

Manufacturing Standards

- BCCL/CBCL: 2 utlilty drawers, 1 filing drawer and 1 lateral filing drawer;
- HJAB handles;
- Black locks;
- 2 crossbars;
- Counterweight;
- Height: 29".

Handles: *For handles other than HJAB standard, please choose from the Logiflex list at no extra charge.*

Prices

Dimensions A	B	MA	MAL
2030		1730	1979
2036		1840	2099
2430		1814	2063
2436		1922	2188

How to Order

	MA MAL		BCCL CBCL		HJAB (std)
		A		B	
	series	depth	pedestal	width	handles (p. 110)
Example	MA	20	BCCL	36	HJAB

Lateral Filing Cabinets

CL2

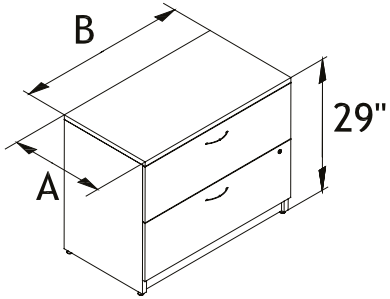

CL3

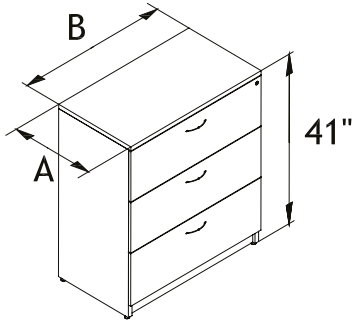

CL4

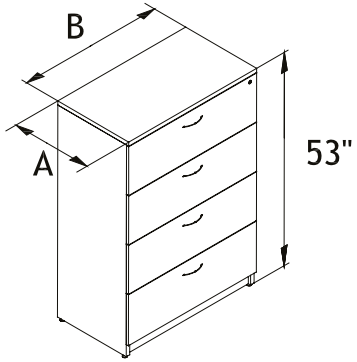

Manufacturing Standards

- 2, 3 or 4 lateral filing drawers;
- HJAB handles;
- Black interlock locks;
- 2 crossbars per file drawer;
- Counterweight (CL2 only).

Handles: *For handles other than HJAB standard, please choose from the Logiflex list at no extra charge.*

Legs: *To add metal legs under the cabinets. Add $70 retail each. Logiflex will adjust the unit to the desired height.*

- Satin nickel metal corner legs (PSQ);
- Black metal oval legs (OVAMBL);
- Satin nickel metal oval legs (OVAMSN).

Prices

CL2 - 2 lateral filing drawers

Dimensions A B	MA	MAL
2030	1255	1454
2036	1365	1589
2042	1489	1746
2430	1340	1571
2436	1447	1715
2442	1566	1857

CL3 - 3 lateral filing drawers

Dimensions A B	MA
2030	1878
2036	1980
2430	1980
2436	2082

CL4 - 4 lateral filing drawers

Dimensions A B	MA
2030	2388
2036	2503
2430	2551
2436	2663

How to Order

	MA MAL	CL	AB	2 3 4	**HJAB (std)**	PSQ OVAMBL OVAMSN
	series	code	dimensions	drawers	handles (p. 110)	legs
Example	MA	**CL**	2036	3	HJAB	PSQ

Credenzas

Credenzas with E or F Pedestal on Left

CEL

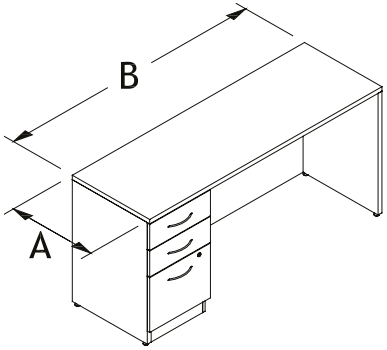

CFL

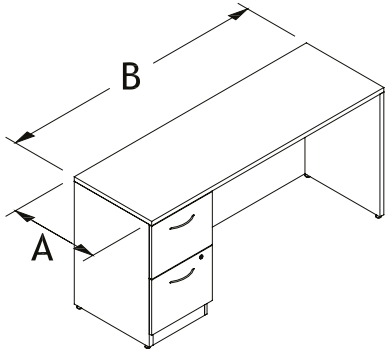

Manufacturing Standards

- E = 2 utility drawers and 1 file drawer;
- F = 2 file drawers;
- HJAB handles;
- Lock;
- Flush modesty;
- Height: 29".

Modesty: *If choice of modesty is not specified, the standard (FM) will be used, PM and SM modesties are available at no extra charge.*

Grommets: *Add ELPF grommets at no charge.*

Handles: *For handles other than HJAB standard, please choose from the Logiflex list at no extra charge.*

Options

Modesty

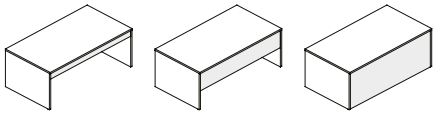

10" high	18-1/2" high	Full height
PM	SM	FM
$0	$0	$0

Grommet Position

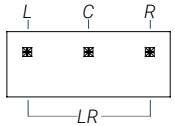

Grommet Style

ELPF	C_PF
$0	$28 ea.

Prices

Dimensions A B	MA	MAL
2054	1462	1749
2060	1525	1828
2066	1575	1902
2072	1642	1995
2084	1760	2144
2454	1552	1864
2460	1593	1936
2466	1651	2027
2472	1720	2106
2484	1833	2274

How to Order

	MA MAL	E F	AB	PM SM **FM (std)**	GRL GRR GLR GRC	CAPF CBPF CCPF **ELPF (std)**	**HJAB (std)**
	series	pedestal	dimensions	modesty	grommet position	grommet style	handles (p. 110)
Example	MA	E	2060	FM	GRC	ELPF	HJAB

Credenzas with E or F Pedestal on Right

CER

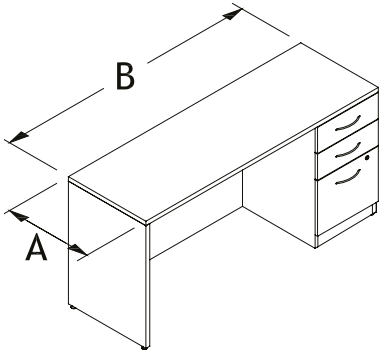

CFR

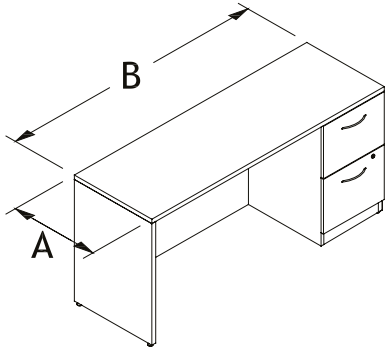

Manufacturing Standards

- E = 2 utility drawers and 1 file drawer;
- F = 2 file drawers;
- HJAB handles;
- Lock;
- Flush modesty;
- Height: 29".

Modesty: *If choice of modesty is not specified, the standard (FM) will be used, PM and SM modesties are available at no extra charge.*

Grommets: *Add ELPF grommets at no charge.*

Handles: *For handles other than HJAB standard, please choose from the Logiflex list at no extra charge.*

Options

Modesty

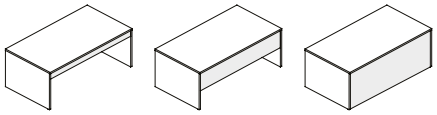

10" high	18-1/2" high	Full height
PM	SM	FM
$0	$0	$0

Grommet Position

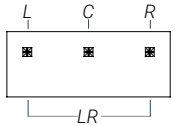

Grommet Style

ELPF	C_PF
$0	$28 ea.

Prices

Dimensions A B	MA	MAL
2054	1462	1749
2060	1525	1828
2066	1575	1902
2072	1642	1995
2084	1760	2144
2454	1552	1864
2460	1593	1936
2466	1651	2027
2472	1720	2106
2484	1833	2274

How to Order

	MA MAL	AB	E F	PM SM **FM (std)**	GRL GRR GLR GRC	CAPF CBPF CCPF **ELPF (std)**	**HJAB (std)**
	series	dimensions	pedestal	modesty	grommet position	grommet style	handles (p. 110)
Example	MA	2060	E	FM	GRC	ELPF	HJAB

Credenzas with Combination Pedestal on Left

CCBCL

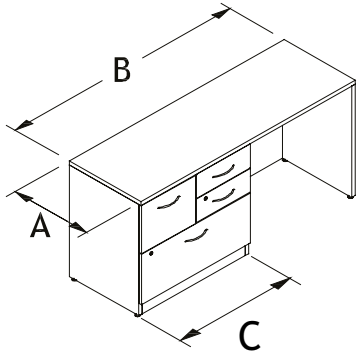

Manufacturing Standards

- 2 utility drawers, one file drawer and one lateral file drawer;
- HJAB handles;
- Locks;
- Flush modesty;
- Height: 29".

Modesty: *If choice of modesty is not specified, the standard (FM) will be used, PM and SM modesties are available at no extra charge.*

Grommets: *Add ELPF grommets at no charge.*

Handles: *For handles other than HJAB standard, please choose from the Logiflex list at no extra charge.*

Options

Modesty

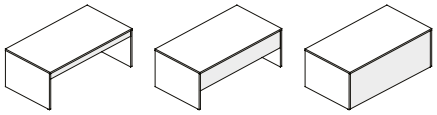

10" high	18-1/2" high	Full height
PM	SM	FM
$0	$0	$0

Grommet Position

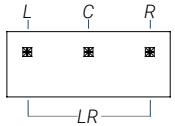

Grommet Style

ELPF	C_PF
$0	$28 ea.

How to Order

	MA MAL		C	AB	PM SM **FM (std)**	GRL GRR GLR GRC	CAPF CBPF CCPF **ELPF (std)**	**HJAB (std)**
		CBCL						
	series	pedestal	pedestal width	dimensions	modesty	grommet position	grommet style	handles (p. 110)
Example	MA	**CBCL**	30	2060	FM	GRC	ELPF	HJAB

Prices

Dimensions A B C	MA	MAL
206030	2212	2597
206630	2269	2647
207230	2335	2727
208430	2448	2880
246030	2299	2716
246630	2354	2799
247230	2416	2880
248430	2545	3052
206036	2335	2705
206636	2361	2775
207236	2448	2855
208436	2566	3007
246036	2416	2845
246636	2467	2927
247236	2533	3007
248436	2660	3181

Credenzas with Combination Pedestal on Right

CBCCL

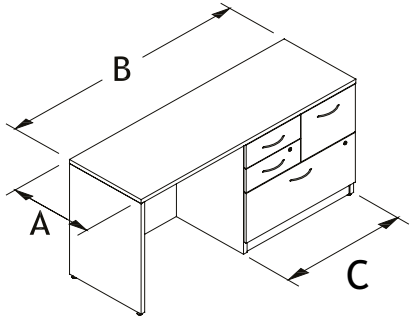

Manufacturing Standards

- 2 utility drawers, one file drawer and one lateral file drawer;
- HJAB handles;
- Locks;
- Flush modesty;
- Height: 29".

Modesty: *If choice of modesty is not specified, the standard (FM) will be used, PM and SM modesties are available at no extra charge.*

Grommets: *Add ELPF grommets at no charge.*

Handles: *For handles other than HJAB standard, please choose from the Logiflex list at no extra charge.*

Options

Modesty

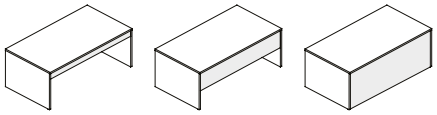

10" high	18-1/2" high	Full height
PM	SM	FM
$0	$0	$0

Grommet Position

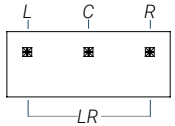

Grommet Style

ELPF	C_PF
$0	$28 ea.

How to Order

	MA MAL	AB		C	PM SM **FM (std)**	GRL GRR GLR GRC	CAPF CBPF CCPF **ELPF (std)**	**HJAB (std)**
			BCCL					
	series	dimensions	pedestal	pedestal width	modesty	grommet position	grommet style	handles (p. 110)
Example	MA	2060	**BCCL**	30	FM	GRC	ELPF	HJAB

Prices

Dimensions A B C	MA	MAL
206030	2212	2597
206630	2269	2647
207230	2335	2727
208430	2448	2880
246030	2299	2716
246630	2354	2799
247230	2416	2880
248430	2545	3052
206036	2335	2705
206636	2361	2775
207236	2448	2855
208436	2566	3007
246036	2416	2845
246636	2467	2927
247236	2533	3007
248436	2660	3181

Credenzas with Lateral Filing Cabinet on Left

CCLL

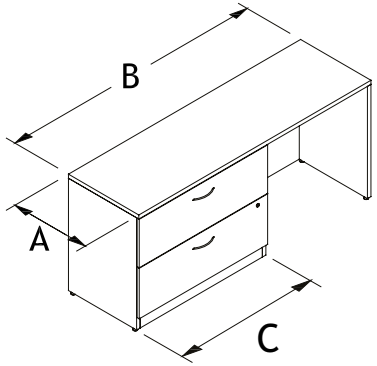

Manufacturing Standards

- 2 lateral file drawers;
- HJAB handles;
- Lock;
- 2 crossbars per file drawer;
- Flush modesty;
- Height: 29".

Modesty: *If choice of modesty is not specified, the standard (FM) will be used, PM and SM modesties are available at no extra charge.*

Grommets: *Add ELPF grommets at no charge.*

Handles: *For handles other than HJAB standard, please choose from the Logiflex list at no extra charge.*

Options

Modesty

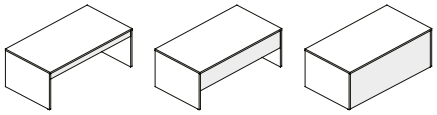

10" high	18-1/2" high	Full height
PM	SM	FM
$0	$0	$0

Grommet Position

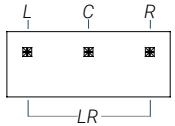

Grommet Style

ELPF	C_PF
$0	$28 ea.

How to Order

	MA MAL		C	AB	PM SM **FM (std)**	GRL GRR GLR GRC	CAPF CBPF CCPF **ELPF (std)**	**HJAB (std)**
		CL						
	series	left pedestal	pedestal width	dimensions	modesty	grommet position	grommet style	handles (p. 110)
Example	MA	**CL**	30	2060	FM	GRC	ELPF	HJAB

Prices

Dimensions A B C	MA	MAL
206030	1706	2063
206630	1760	2144
207230	1824	2228
208430	1941	2383
246030	1855	2228
246630	1909	2308
247230	1968	2383
248430	2089	2553
206036	1824	2193
206636	1877	2274
207236	1941	2356
208436	2058	2516
246036	1968	2356
246636	2025	2434
247236	2089	2516
248436	2203	2682
206042	1941	2321
206642	1994	2402
207242	2058	2488
208442	2170	2647
246042	2089	2488
246642	2141	2568
247242	2203	2647
248442	2319	2807

Credenzas with Lateral Filing Cabinet on Right

CCLR

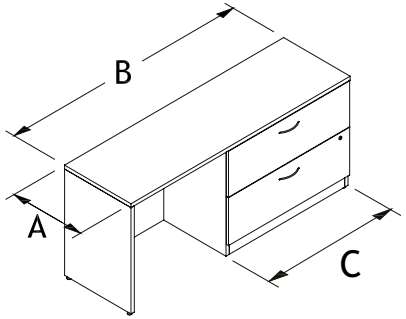

Manufacturing Standards

- 2 lateral file drawers;
- HJAB handles;
- Lock;
- 2 crossbars per file drawer;
- Flush modesty;
- Height: 29".

Modesty: *If choice of modesty is not specified, the standard (FM) will be used, PM and SM modesties are available at no extra charge.*

Grommets: *Add ELPF grommets at no charge.*

Handles: *For handles other than HJAB standard, please choose from the Logiflex list at no extra charge.*

Options

Modesty

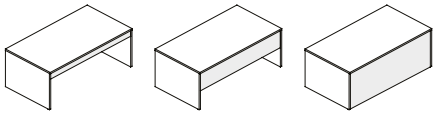

10" high	18-1/2" high	Full height
PM	SM	FM
$0	$0	$0

Grommet Position

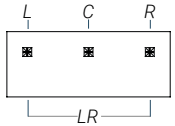

Grommet Style

ELPF	C_PF
$0	$28 ea.

How to Order

	MA MAL	AB		C	PM SM **FM (std)**	GRL GRR GLR GRC	CAPF CBPF CCPF **ELPF (std)**	**HJAB (std)**
			CL					
	series	dimensions	right pedestal	pedestal width	modesty	grommet position	grommet style	handles (p. 110)
Example	MA	2060	**CL**	30	FM	GRC	ELPF	HJAB

Prices

Dimensions A B C	MA	MAL
206030	1706	2063
206630	1760	2144
207230	1824	2228
208430	1941	2383
246030	1855	2228
246630	1909	2308
247230	1968	2383
248430	2089	2553
206036	1824	2193
206636	1877	2274
207236	1941	2356
208436	2058	2516
246036	1968	2356
246636	2025	2434
247236	2089	2516
248436	2203	2682
206042	1941	2321
206642	1994	2402
207242	2058	2488
208442	2170	2647
246042	2089	2488
246642	2141	2568
247242	2203	2647
248442	2319	2807

Credenzas with Cabinet on Left

CARL

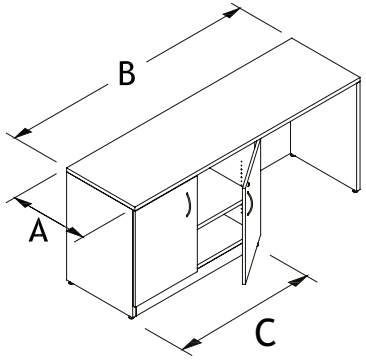

Manufacturing Standards

- 2 door cabinet;
- HJAB handles;
- Lock;
- 1 adjustable shelf;
- Flush modesty;
- Height: 29".

Modesty: *If choice of modesty is not specified, the standard (FM) will be used, PM and SM modesties are available at no extra charge.*

Grommets: *Add ELPF grommets at no charge.*

Handles: *For handles other than HJAB standard, please choose from the Logiflex list at no extra charge.*

Options

Modesty

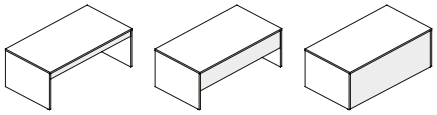

10" high	18-1/2" high	Full height
PM	SM	FM
$0	$0	$0

Grommet Position

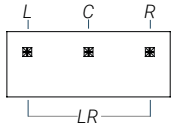

Grommet Style

ELPF	C_PF
$0	$28 ea.

How to Order

	MA MAL		C	AB	PM SM **FM (std)**	GRL GRR GLR GRC	CAPF CBPF CCPF **ELPF (std)**	**HJAB (std)**
		AR						
	series	cabinet	cabinet width	dimensions	modesty	grommet position	grommet style	handles (p. 110)
Example	MA	**AR**	30	2060	FM	GRC	ELPF	HJAB

Prices

Dimensions A B C	MA	MAL
206030	1525	1828
206630	1576	1902
207230	1642	1995
208430	1760	2144
246030	1592	1936
246630	1651	2027
247230	1720	2106
248430	1833	2274
206036	1575	1892
206636	1637	1958
207236	1694	2052
208436	1814	2201
246036	1642	1995
246636	1706	2087
247236	1771	2165
248436	1888	2333
206042	1651	1970
206642	1706	2040
207242	1771	2137
208442	1888	2287
246042	1720	2075
246642	1746	2165
247242	1842	2246
248442	1960	2417

Credenzas with Cabinet on Right

CARR

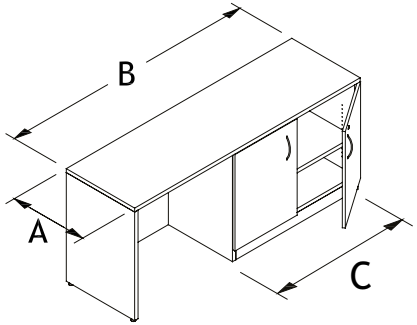

Manufacturing Standards

- 2 door cabinet;
- HJAB handles;
- Lock;
- 1 adjustable shelf;
- Flush modesty;
- Height: 29".

Modesty: *If choice of modesty is not specified, the standard (FM) will be used, PM and SM modesties are available at no extra charge.*

Grommets: *Add ELPF grommets at no charge.*

Handles: *For handles other than HJAB standard, please choose from the Logiflex list at no extra charge.*

Options

Modesty

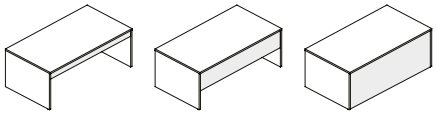

10" high	18-1/2" high	Full height
PM	SM	FM
$0	$0	$0

Grommet Position

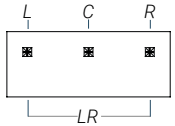

Grommet Style

ELPF	C_PF
$0	$28 ea.

How to Order

	MA MAL	AB		C	PM SM **FM (std)**	GRL GRR GLR GRC	CAPF CBPF CCPF **ELPF (std)**	**HJAB (std)**
			AR					
	series	dimensions	cabinet	cabinet width	modesty	grommet position	grommet style	handles (p. 110)
Example	MA	2060	**AR**	30	FM	GRC	ELPF	HJAB

Prices

Dimensions A B C	MA	MAL
206030	1525	1828
206630	1576	1902
207230	1642	1995
208430	1760	2144
246030	1592	1936
246630	1651	2027
247230	1720	2106
248430	1833	2274
206036	1575	1892
206636	1637	1958
207236	1694	2052
208436	1814	2201
246036	1642	1995
246636	1706	2087
247236	1771	2165
248436	1888	2333
206042	1651	1970
206642	1706	2040
207242	1771	2137
208442	1888	2287
246042	1720	2075
246642	1746	2165
247242	1842	2246
248442	1960	2417

Combination Credenzas with Cabinets

ARAR

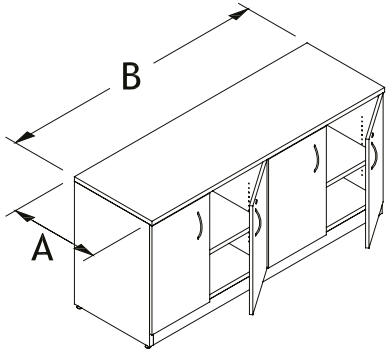

Manufacturing Standards

- 2 cabinet sections;
- HJAB handles;
- Locks;
- 2 adjustable shelves;
- Height: 29".

Handles: *For handles other than HJAB standard, please choose from the Logiflex list at no extra charge.*

Prices

Dimensions A	B	MA	MAL
2060		1833	2165
2066		1916	2274
2072		1982	2369
2084		2129	2553
2460		1929	2308
2466		2001	2417
2472		2076	2503
2484		2212	2693

How to Order

	MA MAL	AB		HJAB (std)
			ARAR	
	series	dimensions	code	handles (p. 110)
Example	MA	2060	**ARAR**	HJAB

Combination Credenzas with Lateral File Drawers and Cabinet

ARCL

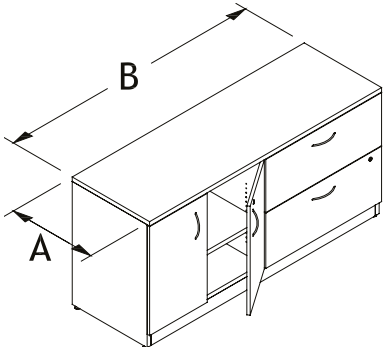

CLAR

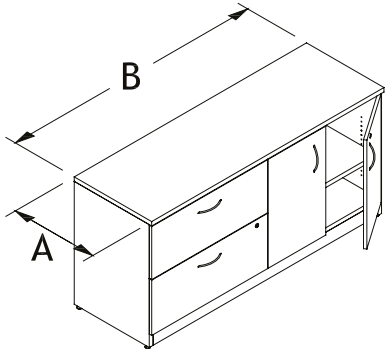

Manufacturing Standards

- 1 lateral file drawer and 1 cabinet on left or right;
- HJAB handles;
- Locks;
- Adjustable shelf;
- 2 crossbars per file drawer;
- Height: 29".

Handles: *For handles other than HJAB standard, please choose from the Logiflex list at no extra charge.*

Prices

Dimensions A B	MA	MAL
2060	2237	2608
2066	2299	2693
2072	2375	2799
2084	2522	2982
2460	2424	2855
2466	2502	2963
2472	2573	3052
2484	2711	3240

How to Order

	MA MAL	AB	ARCL CLAR	**HJAB (std)**
	series	dimensions	code	handles (p. 110)
Example	MA	2060	ARCL	HJAB

Combination Credenzas with Lateral File Drawers

CLCL

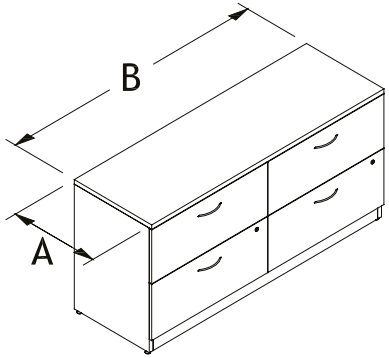

Manufacturing Standards

- 2 sets of lateral file drawers;
- HJAB handles;
- Locks;
- 2 crossbars per file drawer;
- Counterweight;
- Height: 29".

Handles: *For handles other than HJAB standard, please choose from the Logiflex list at no extra charge.*

Prices

Dimensions A B	MA	MAL
2060	2416	2806
2066	2543	2957
2072	2672	3122
2084	2922	3424
2460	2672	3122
2466	2796	3283
2472	2923	3433
2484	3174	3749

How to Order

	MA MAL	AB		HJAB (std)
			CLCL	
	series	dimensions	code	handles (p. 110)
Example	MA	2060	**CLCL**	HJAB

Server Credenzas

SCARAR

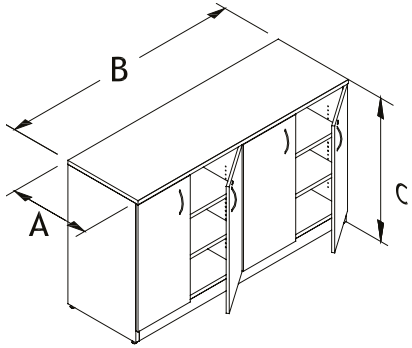

Manufacturing Standards

- 2 cabinet sections;
- HJAB handles;
- Locks;
- 2 adjustable shelves per cabinet;
- Height: 36".

Handles: *For handles other than HJAB standard, please choose from the Logiflex list at no extra charge.*

Prices

Dimensions A B C	MA	MAL
206036	2340	2727
206636	2467	2880
207236	2596	3043
246036	2596	3043
246636	2722	3203
247236	2848	3355

How to Order

	MA MAL	AB		C	HJAB (std)
			SCARAR	**36**	
	series	dimensions	code	height	handles (p. 110)
Example	MA	2060	**SCARAR**	**36**	HJAB

Server Credenzas with Utility Drawers

SCU02

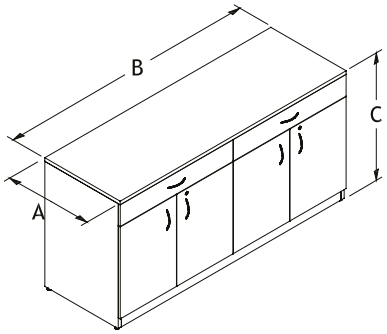

Manufacturing Standards

- 2 cabinet sections with locks;
- 1 adjustable shelf per cabinet;
- 2 drawers;
- HJAB handles;
- Height: 36".

Handles: *For handles other than HJAB standard, please choose from the Logiflex list at no extra charge.*

Prices

SCU02 - 2 drawers

Dimensions A B C	MA	MAL
206036	2880	3352
206636	2955	3429
207236	3032	3508
246036	2940	3412
246636	3013	3493
247236	3091	3571

How to Order

	MA MAL	AB	SCU02 SCU04	C	**HJAB (std)**	LKSN **LKBL (std)**
				36		
	series	dimensions	code	height	handles (p. 110)	lock (p. 119)
Example	MA	2060	SCU02	**36**	HJAB	LKBL

Server Credenzas with Utility Drawers

SCU02FL

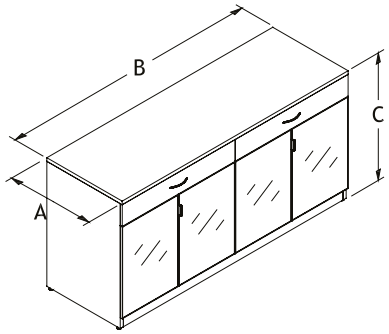

Manufacturing Standards

- 2 cabinets with white glass (V4) and built-in aluminum handles;
- Soft-close doors;
- 1 adjustable shelf per cabinet;
- 2 drawers with HJA handles;
- Height: 36".

Glass: *If the choice of glass is not specified, the standard is white glass (V4). For other choices of glass, consult the Logiflex color chart.*

Drawer Handles: *For handles other than HJA standard, please choose from the Logiflex list at no extra charge.*

Prices

SCU02FL - 2 drawers

Dimensions A B C	MA	MAL
206036	6208	6886
206636	6449	7142
207236	6695	7397
246036	6276	6956
246636	6518	7214
247236	6764	7466

How to Order

	MA MAL	AB	SCU02FL SCU04FL	C	KB PL **V4 (std)**	**HJA (std)**
				36		
	series	dimensions	code	height	glass	handles (p. 110)
Example	MA	2060	SCU02FL	**36**	V4	HJA

Hutches and Wall Storage

Adjustable Shelf Hutches

HAS

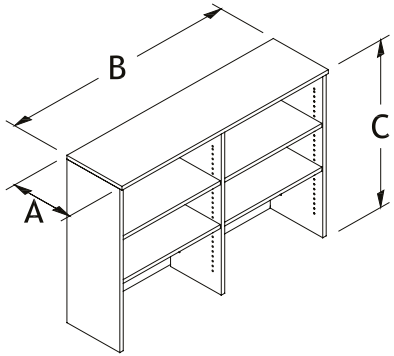

Leg Bases

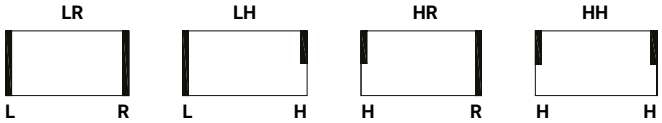

Full Legs | Half Leg on Right | Half Leg on Left | 2 Half Legs

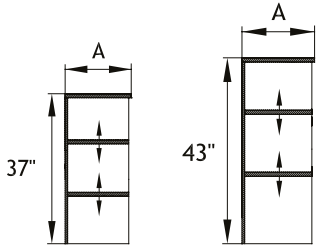

37" high hutch | 43" high hutch

Manufacturing Standards

- Horizontal wood grain on back panel;
- 1-1/8" wiring space at lower back;
- Vertical middle panel on hutches 54" wide or more.

Half Legs: *Half legs are curved.*

Tackboards: *A fabric (TB) tackboard can be added.*

Grommet*: A black flexible grommet (GRH) can be added.*

Leg Base: *If the choice of base is not specified, the standard is 2 full legs (LR). For 1/2 leg on left or right (HR or LH) add $46 retail, For two half legs (HH), add $93 retail.* ***Warning****: hutches with half legs (HH) must be secured to the wall or adjacent furniture so that they do not tip forward. Logiflex is not responsible for any accidents caused by incorrectly installed hutches.*

Options

Tackboard

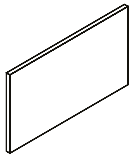

TB

Grommet

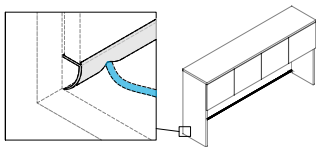

GRH
$0

How to Order

	MA	AB		C	TB	HH HR LH **LR (std)**	GRH
			HAS				
	series	dimensions	code	height	tackboard (p. 86)	leg base	Grommet
Example	MA	1636	**HAS**	43	TB	LR	GRH

Prices

Dimensions A B C	MA
163037	931
163637	973
164237	1096
164837	1163
165437	1246
166037	1301
166637	1386
167237	1552
168437	1839
163043	991
163643	1029
164243	1201
164843	1248
165443	1349
166043	1392
166643	1492
167243	1651
168443	1963

Wall Hutches with Doors

HPW

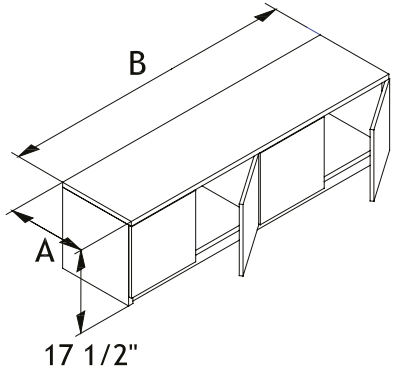

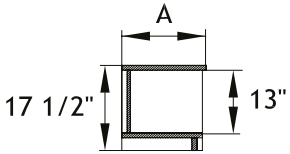

Manufacturing Standards

- Task light concealer;
- Z-bar wall mount.

Number of Doors:
30" - 42": 2 doors, 48" - 54": 3 doors, 60" - 72": 4 doors, 84": 5 doors.

Locks: *Offered as option. Black (LKBL) or satin nickel (LKSN). Match to handle color.*

Dividers: *Offered as option. Pre-drilled holes for dividers (DVD), set of 3 wire dividers included.*

Handles: *To add handles, please choose from the Logiflex list. Add $15 retail each.*

Attention: *Logiflex is not responsible for the installation of wall hutches. This responsibility belongs entirely to the distributor or the client.*

Options

Lock

LK
$47 ea.

Pre-drilled Holes with 3 Dividers

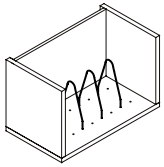

DVD
$31

Task Light

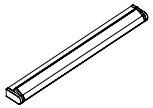

T5
DEL20
$$

Prices

Dimensions A B	MA
1630	699
1636	796
1642	898
1648	996
1654	1134
1660	1247
1666	1347
1672	1396
1684	1545

How to Order

	MA	AB		LKBL LKSN	DVD		T524 T536 T548 DEL20
			HPW				
	series	dimensions	code	lock (p. 119)	dividers	handles (p. 110)	task light (p.208)
Example	MA	1636	**HPW**	LKSN	DVD		

Wall Hutches with Glass Doors

HPFLW

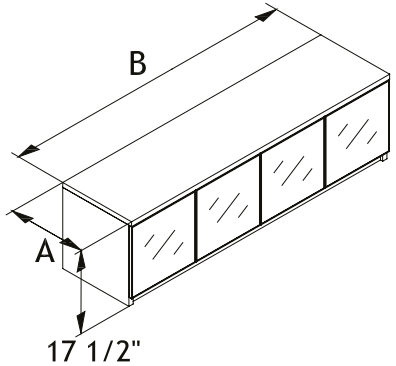

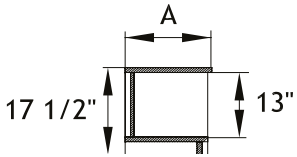

Manufacturing Standards

- White glass (V4) doors with aluminum-frame;
- Soft-close doors;
- Task light concealer;
- Z-bar wall mount.

Number of Doors:
30" - 42": 2 doors, 48" - 54": 3 doors, 60" - 72": 4 doors, 84": 5 doors.

Glass: *If the choice of glass is not specified, the standard is white glass (V4). For other choices of glass, consult the Logiflex color chart. Same price for all.*

Dividers: *Offered as option. Pre-drilled holes for dividers (DVD), set of 3 wire dividers included.*

Handles: *Optional built-in aluminum handles are available. Add $15 retail each.*

Attention: *Logiflex is not responsible for the installation of wall hutches. This responsibility belongs entirely to the distributor or the client.*

Options

Pre-drilled Holes with 3 Dividers

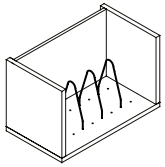

DVD
$31

Handles

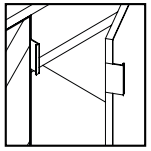

H001
$15 ea.

Task Light

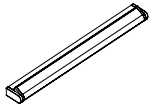

T5
DEL20
$$

How to Order

	MA	AB		KB PL **V4 (std)**	DVD	H001	T524 T536 T548 DEL20
			HPFLW				
	series	dimensions	code	glass	dividers	handles	task light (p. 206)
Example	MA	1636	**HPFLW**	V4	DVD	H001	

Prices

Dimensions A B	MA
1630	1128
1636	1292
1642	1482
1648	1726
1654	1971
1660	2178
1666	2377
1672	2530
1684	2880

Wall Hutches with Doors and Pigeon Hole Unit

HPPGW

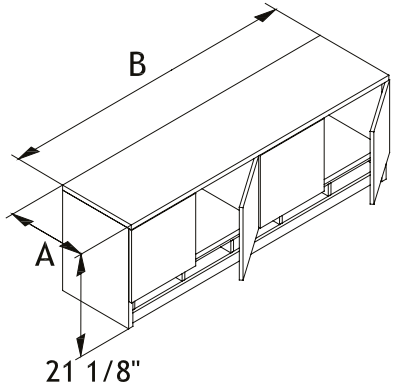

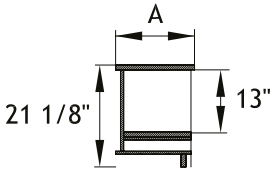

Manufacturing Standards

- Pigeon hole compartment interiors are 2-3/8";
- Task light concealer;
- Z-bar wall mount.

Number of Doors:
30" - 42": 2 doors, 48" - 54": 3 doors, 60" - 72": 4 doors, 84": 5 doors.

Locks: *Offered as option. Black (LKBL) or satin nickel (LKSN). Match to handle color.*

Dividers: *Offered as option. Pre-drilled holes for dividers (DVD), set of 3 wire dividers included.*

Handles: *To add handles, please choose from the Logiflex list. Add $15 retail each.*

Attention: *Logiflex is not responsible for the installation of wall hutches. This responsibility belongs entirely to the distributor or the client.*

Options

Lock

LK
$47 ea.

Pre-drilled Holes with 3 Dividers

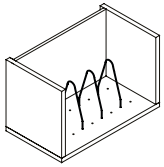

DVD
$31

Task Light

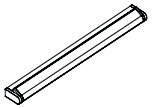

T5
DEL20
$$

Prices

Dimensions A B	MA
1630	1054
1636	1181
1642	1302
1648	1423
1654	1619
1660	1731
1666	1876
1672	1930
1684	2131

How to Order

	MA	AB		LKBL LKSN	DVD		T524 T536 T548 DEL20
			HPPGW				
	series	dimensions	code	lock (p. 119)	dividers	handles (p. 110)	task light (p.208)
Example	MA	1636	**HPPGW**	LKSN	DVD		

Desk Hutches with Doors

HP

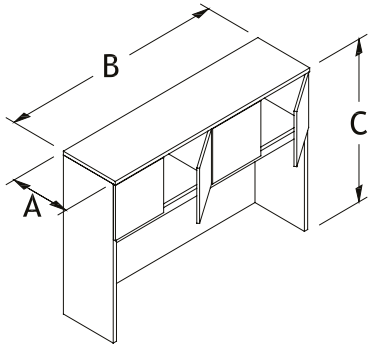

Leg Bases

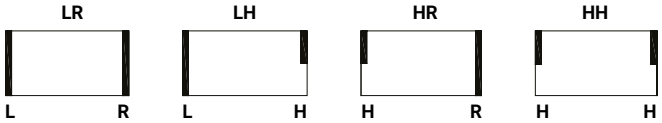

Full Legs | Half Leg on Right | Half Leg on Left | 2 Half Legs

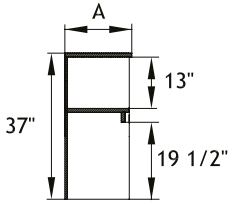

37" high hutch

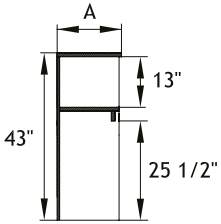

43" high hutch

Manufacturing Standards

- Horizontal wood grain on back panel;
- Task light concealer;

Number of Doors:
30" - 42": 2 doors, 48" - 54": 3 doors, 60" - 72": 4 doors, 84": 5 doors.

Tackboards: *A fabric (TB) tackboard can be added.*

Grommet*: A black flexible grommet (GRH) can be added.*

Leg Base: *If the choice of base is not specified, the standard is 2 full legs (LR). For 1/2 leg on left or right (HR or LH) add $46 retail, For two half legs (HH), add $93 retail.* ***Warning****: hutches with half legs (HH) must be secured to the wall or adjacent furniture so that they do not tip forward. Logiflex is not responsible for any accidents caused by incorrectly installed hutches.*

Locks: *Offered as option. Black (LKBL) or satin nickel (LKSN). Match to handle color.*

Dividers: *Offered as option. Pre-drilled holes for dividers (DVD), set of 3 wire dividers included.*

Handles: *To add handles, please choose from the Logiflex list. Add $15 retail each.*

Options

Tackboard

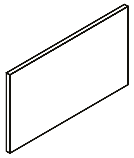

TB

Lock

LK
$47 ea.

Pre-drilled Holes with 3 Dividers

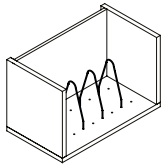

DVD
$31

Grommet

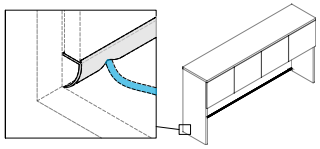

GRH
$0

Task Light

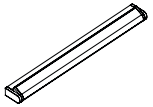

T5
DEL20
$$

Prices

Dimensions A B C	MA
163037	890
163637	1008
164237	1062
164837	1153
165437	1431
166037	1451
166637	1519
167237	1642
168437	1842
163043	973
163643	1093
164243	1143
164843	1239
165443	1519
166043	1534
166643	1602
167243	1729
168443	1994

How to Order

	MA	AB		C	TB	HH HR LH **LR (std)**	LKBL LKSN	DVD		GRH	T524 T536 T548 DEL20
			HP								
	series	dimensions	code	height	tackboard (p. 86)	leg base	lock (p. 119)	dividers	handles (p. 110)	Grommet	task light (p. 208)
Example	MA	1636	**HP**	43	TB	LR	LKSN	DVD		GRH	

Desk Hutches with Glass Doors

HPFL

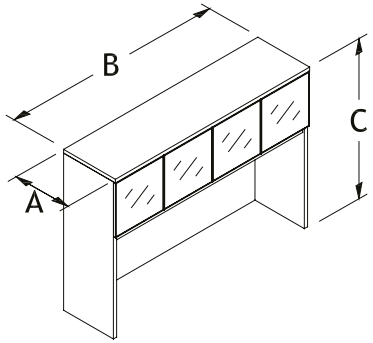

Leg Bases

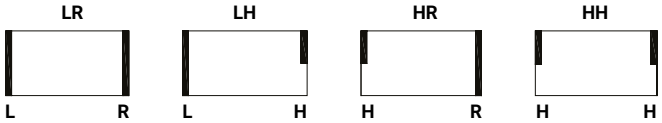

Full Legs | Half Leg on Right | Half Leg on Left | 2 Half Legs

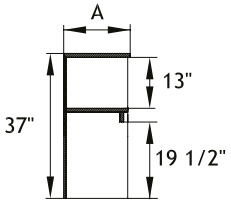

37" high hutch

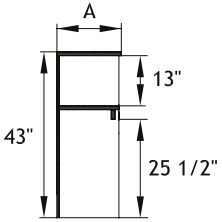

43" high hutch

Options

Tackboard

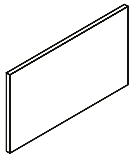

TB

Pre-drilled Holes with 3 Dividers

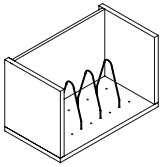

DVD
$31

Handles

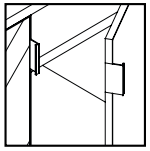

H001
$15 ea.

Grommet

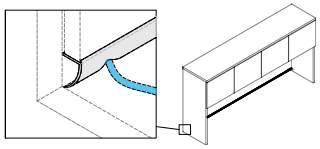

GRH
$0

Task Light

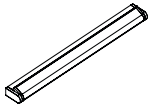

T5
DEL20
$$

How to Order

	MA	AB		C	TB	HH HR LH **LR (std)**	KB PL **V4 (std)**	DVD	H001	GRH	T524 T536 T548 DEL20
			HPFL								
	series	dimensions	code	height	tackboard (p. 86)	leg base	glass	dividers	handles	Grommet	task light (p. 208)
Example	MA	1636	**HPFL**	43	TB	LR	V4	DVD	H001	GRH	

Manufacturing Standards

- White glass (V4) doors with aluminum-frame;
- Horizontal wood grain on back panel;
- Soft-close doors;
- Task light concealer;

Number of Doors:
30" - 42": 2 doors, 48" - 54": 3 doors, 60" - 72": 4 doors, 84": 5 doors.

Tackboards: *A fabric (TB) tackboard can be added.*

Grommet*: A black flexible grommet (GRH) can be added.*

Leg Base: *If the choice of base is not specified, the standard is 2 full legs (LR). For 1/2 leg on left or right (HR or LH) add $46 retail, For two half legs (HH), add $93 retail.* ***Warning****: hutches with half legs (HH) must be secured to the wall or adjacent furniture so that they do not tip forward. Logiflex is not responsible for any accidents caused by incorrectly installed hutches.*

Glass: *If the choice of glass is not specified, the standard is white glass (V4). For other choices of glass, consult the Logiflex color chart.*

Dividers: *Offered as option. Pre-drilled holes for dividers (DVD), set of 3 wire dividers included.*

Handles: *Optional built-in aluminum handles are available. Add $15 retail each.*

Prices

Dimensions A B C	MA
163037	1474
163637	1645
164237	1791
164837	2036
165437	2438
166037	2562
166637	2717
167237	2958
168437	3775
163043	1620
163643	1813
164243	1961
164843	2203
165443	2609
166043	2731
166643	2888
167243	3179
168443	4044

Desk Hutches with Doors

HPA

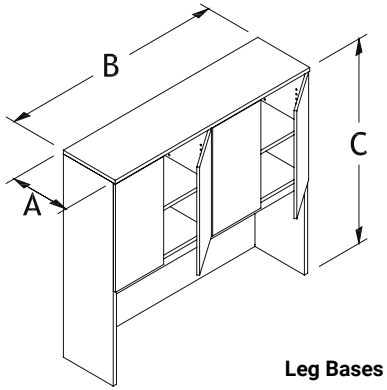

Leg Bases

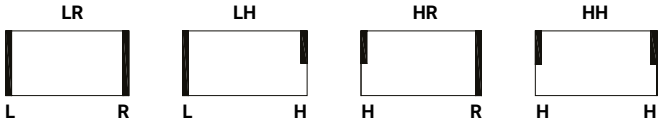

Full Legs | Half Leg on Right | Half Leg on Left | 2 Half Legs

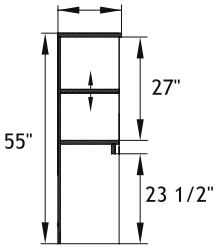

55" high hutch

Manufacturing Standards

- Horizontal wood grain on back panel;
- Task light concealer;
- One adjustable shelf per section;

Number of Doors:
30" - 42": 2 doors, 48" - 54": 3 doors, 60" - 72": 4 doors, 84": 5 doors.

Tackboards: *A fabric (TB) tackboard can be added.*

Grommet*: A black flexible grommet (GRH) can be added.*

Leg Base: *If the choice of base is not specified, the standard is 2 full legs (LR). For 1/2 leg on left or right (HR or LH) add $46 retail, For two half legs (HH), add $93 retail.* ***Warning****: hutches with half legs (HH) must be secured to the wall or adjacent furniture so that they do not tip forward. Logiflex is not responsible for any accidents caused by incorrectly installed hutches.*

Locks: *Offered as option. Black (LKBL) or satin nickel (LKSN). Match to handle color.*

Dividers: *Offered as option. Pre-drilled holes for dividers (DVD), set of 3 wire dividers included.*

Handles: *To add handles, please choose from the Logiflex list. Add $15 retail each.*

Options

Tackboard

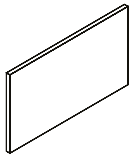

TB

Lock

LK
$47 ea.

Pre-drilled Holes with 3 Dividers

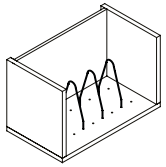

DVD
$31

Grommet

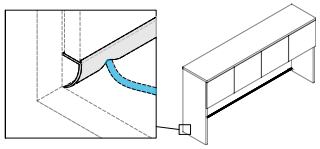

GRH
$0

Task Light

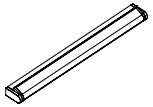

T5
DEL20
$$

Prices

Dimensions A B C	MA
163055	1637
163655	1739
164255	1888
164855	2045
165455	2382
166055	2522
166655	2672
167255	2744
168455	3011

How to Order

	MA	AB		C	TB	HH HR LH **LR (std)**	LKBL LKSN	DVD		GRH	T524 T536 T548 DEL20
			HPA	**55**							
	series	dimensions	code	height	tackboard (p. 86)	leg base	lock (p. 119)	dividers	handles (p. 110)	Grommet	task light (p. 208)
Example	MA	1636	**HPA**	**55**	TB	LR	LKSN	DVD		GRH	

Desk Hutches with Glass Doors

HPAFL

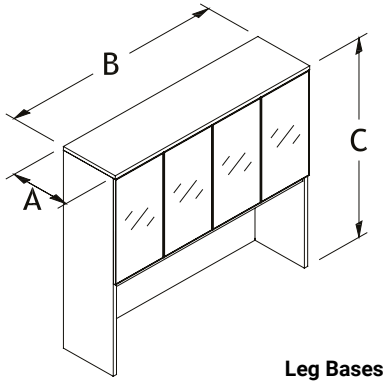

Leg Bases

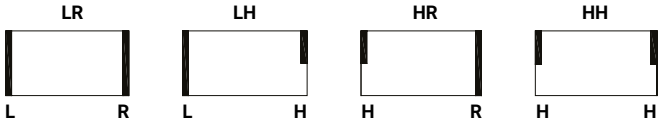

Full Legs | Half Leg on Right | Half Leg on Left | 2 Half Legs

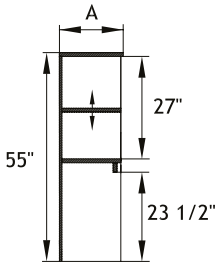

55" high hutch

Options

Tackboard

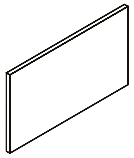

TB

Pre-drilled Holes with 3 Dividers

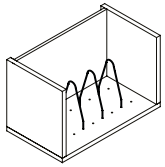

DVD
$31

Handles

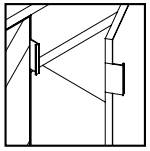

H001
$15 ea.

Grommet

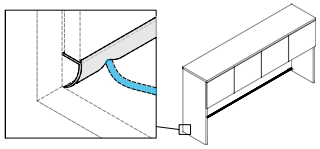

GRH
$0

Task Light

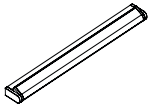

T5
DEL20
$$

How to Order

	MA	AB		C	TB	HH HR LH **LR (std)**	KB PL **V4 (std)**	DVD	H001	GRH	T524 T536 T548 DEL20
			HPAFL	**55**							
	series	dimensions	code	height	tackboard (p. 86)	leg base	glass	dividers	handles	Grommet	task light (p. 208)
Example	MA	1636	**HPAFL**	**55**	TB	LR	V4	DVD	H001	GRH	

Manufacturing Standards

- White glass (V4) doors with aluminum-frame;
- Horizontal wood grain on back panel;
- Soft-close doors;
- Task light concealer;
- One adjustable shelf per section;

Number of Doors:
30" - 42": 2 doors, 48" - 54": 3 doors, 60" - 72": 4 doors, 84": 5 doors.

Tackboards: *A fabric (TB) tackboard can be added.*

Grommet*: A black flexible grommet (GRH) can be added.*

Leg Base: *If the choice of base is not specified, the standard is 2 full legs (LR). For 1/2 leg on left or right (HR or LH) add $46 retail, For two half legs (HH), add $93 retail.* ***Warning****: hutches with half legs (HH) must be secured to the wall or adjacent furniture so that they do not tip forward. Logiflex is not responsible for any accidents caused by incorrectly installed hutches.*

Glass: *If the choice of glass is not specified, the standard is white glass (V4). For other choices of glass, consult the Logiflex color chart.*

Dividers: *Offered as option. Pre-drilled holes for dividers (DVD), set of 3 wire dividers included.*

Handles: *Optional built-in aluminum handles are available. Add $15 retail each.*

Prices

Dimensions A B C	MA
163055	2741
163655	3032
164255	3389
164855	3741
165455	4298
166055	4631
166655	4970
167255	5241
168455	5884

Desk Hutches with Doors and Pigeon Hole Unit

HPPG

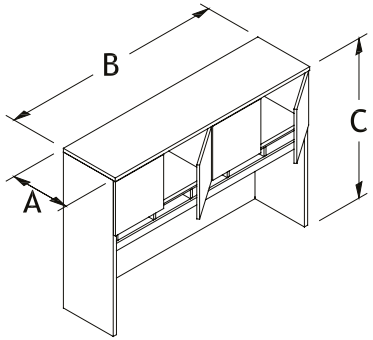

Leg Bases

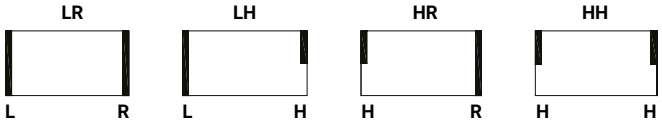

Full Legs | Half Leg on Right | Half Leg on Left | 2 Half Legs

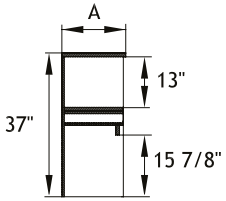

37" high hutch

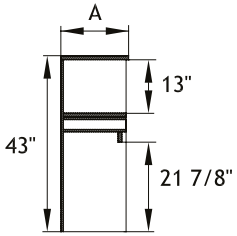

43" high hutch

Manufacturing Standards

- Horizontal wood grain on back panel;
- Pigeon hole compartment interiors are 2-3/8";
- Task light concealer;

Number of Compartments:
24" - 31": 2 compartments, 32" - 50": 3 compartments, 51" - 70": 5 compartments, 71" - 84": 7 compartments.

Number of Doors:
30" - 42": 2 doors, 48" - 54": 3 doors, 60" - 72": 4 doors, 84": 5 doors.

Tackboards: *A fabric (TB) tackboard can be added.*

Grommet*: A black flexible grommet (GRH) can be added.*

Leg Base: *If the choice of base is not specified, the standard is 2 full legs (LR). For 1/2 leg on left or right (HR or LH) add $46 retail, For two half legs (HH), add $93 retail.* ***Warning****: hutches with half legs (HH) must be secured to the wall or adjacent furniture so that they do not tip forward. Logiflex is not responsible for any accidents caused by incorrectly installed hutches.*

Locks: *Offered as option. Black (LKBL) or satin nickel (LKSN). Match to handle color.*

Dividers: *Offered as option. Pre-drilled holes for dividers (DVD), set of 3 wire dividers included.*

Handles: *To add handles, please choose from the Logiflex list. Add $15 retail each.*

Options

Tackboard

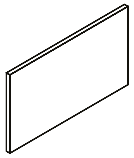

TB

Lock

LK
$47 ea.

Pre-drilled Holes with 3 Dividers

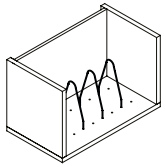

DVD
$31

Grommet

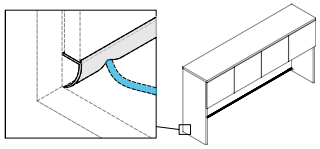

GRH
$0

Task Light

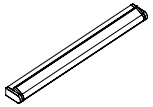

T5
DEL20
$$

Prices

Dimensions A B C	MA
163037	1292
163637	1378
164237	1485
164837	1602
165437	1951
166037	1960
166637	2066
167237	2203
168437	2382
163043	1378
163643	1462
164243	1569
164843	1685
165443	2035
166043	2045
166643	2153
167243	2288
168443	2467

How to Order

	MA	AB		C	TB	HH HR LH **LR (std)**	LKBL LKSN	DVD		GRH	T524 T536 T548 DEL20
			HPPG								
	series	dimensions	code	height	tackboard (p. 86)	leg base	lock (p. 119)	dividers	handles (p. 110)	Grommet	task light (p. 208)
Example	MA	1636	**HPPG**	43	TB	LR	LKSN	DVD		GRH	

Desk Hutches with Doors and Pigeon Hole Unit

HPAPG

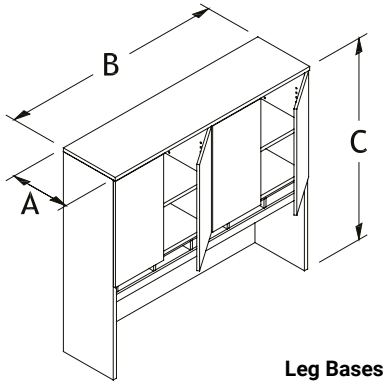

Leg Bases

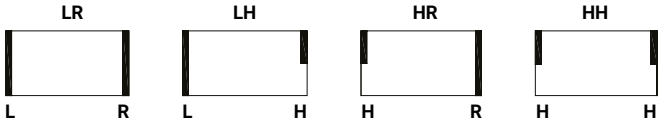

Full Legs | Half Leg on Right | Half Leg on Left | 2 Half Legs

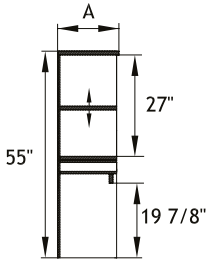

55" high hutch

Options

Tackboard

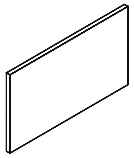

TB

Lock

LK
$47 ea.

Pre-drilled Holes with 3 Dividers

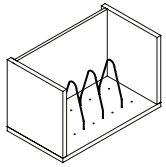

DVD
$31

Grommet

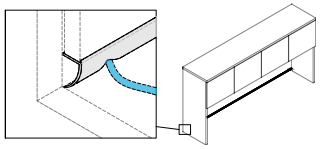

GRH
$0

Task Light

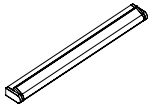

T5
DEL20
$$

How to Order

	MA	AB		C	TB	HH HR LH **LR (std)**	LKBL LKSN	DVD		GRH	T524 T536 T548 DEL20
			HPAPG	**55**							
	series	dimensions	code	height	tackboard (p. 86)	leg base	lock (p. 119)	dividers	handles (p. 110)	Grommet	task light (p. 208)
Example	MA	1636	**HPAPG**	**55**	TB	LR	LKSN	DVD		GRH	

Manufacturing Standards

- Horizontal wood grain on back panel;
- Pigeon hole compartment interiors are 2-3/8";
- Task light concealer;

Number of Compartments:
24" - 31": 2 compartments, 32" - 50": 3 compartments, 51" - 70": 5 compartments, 71" - 84": 7 compartments.

Number of Doors:
30" - 42": 2 doors, 48" - 54": 3 doors, 60" - 72": 4 doors, 84": 5 doors.

Tackboards: *A fabric (TB) tackboard can be added.*

Grommet*: A black flexible grommet (GRH) can be added.*

Leg Base: *If the choice of base is not specified, the standard is 2 full legs (LR). For 1/2 leg on left or right (HR or LH) add $46 retail, For two half legs (HH), add $93 retail.* ***Warning****: hutches with half legs (HH) must be secured to the wall or adjacent furniture so that they do not tip forward. Logiflex is not responsible for any accidents caused by incorrectly installed hutches.*

Locks: *Offered as option. Black (LKBL) or satin nickel (LKSN). Match to handle color.*

Dividers: *Offered as option. Pre-drilled holes for dividers (DVD), set of 3 wire dividers included.*

Handles: *To add handles, please choose from the Logiflex list. Add $15 retail each.*

Prices

Dimensions A B C	MA
163055	2014
163655	2131
164255	2289
164855	2467
165455	2877
166055	3026
166655	3196
167255	3281
168455	3555

Fabric Tackboards for Hutches

TB

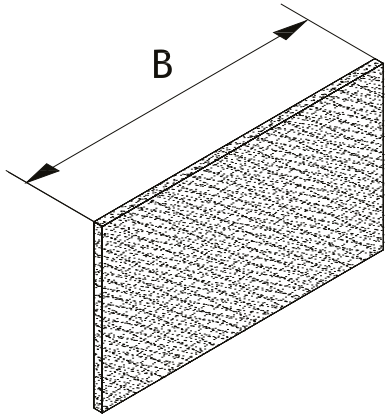

Manufacturing Standards

Standard Fabric: *Please choose from the Logiflex color chart.*

Chair Fabric: *Please submit a quotation request providing the following information: manufacturer's name, pattern name/number and color name/number. Price available upon request.*

COM Fabric: *(Provided by the customer). For pricing please refer GR2 grade price. COM fabrics must be sent directly to your Customer Service Representative,* ***Prepaid.*** *It is important to indicate the reference number of your purchase order on the package containing your fabric.*

Tackboards with COM Fabric:
30" - 42" tackboards = 1.5 yards
48" - 60" tackboards = 2 yards
66" - 78" tackboards = 2.5 yards
84" - 96" tackboards = 3 yards

Tackboards for Existing Hutches:
If ordering a tackboard for an existing hutch, please specify the code of the existing hutch. Logiflex can then make the tackboard to the exact dimensions for easy installation of the product.

Prices

Dimensions B	GRA	GR1	GR2	GR3	GR4	GR5	GR6	GR7	GR8	GR9	GR10	GR11	GR12
30	324	361	408	455	515	575	633	693	753	813	871	991	1 109
36	324	361	408	455	515	575	633	693	753	813	871	991	1 109
42	324	361	408	455	515	575	633	693	753	813	871	991	1 109
48	324	361	408	455	515	575	633	693	753	813	871	991	1 109
54	324	361	408	455	515	575	633	693	753	813	871	991	1 109
60	437	473	520	568	627	687	747	805	865	925	985	1 103	1 223
66	437	473	520	568	627	687	747	805	865	925	985	1 103	1 223
72	481	525	585	645	719	794	867	942	1017	1091	1 165	1 314	1 463
84	531	585	656	728	818	906	996	1085	1174	1263	1 353	1 532	1 710

How to Order

		B		ex: 37, 43, 55	GRA GR1-12	ex: HPPG, HOPG	See Logiflex color chart or COM fabric number
	MA		**TB**				
	series	dimensions	code	existing hutch height	fabric	hutch code (for existing hutch)	fabric
Example	**MA**	30	TB		GR1		

Fabric Tackboards and Display Boards

TBW

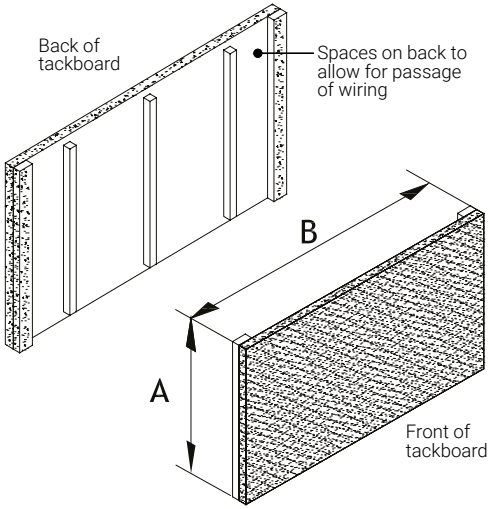

Manufacturing Standards

- Spaces on back to allow for passage of wiring;
- Attaches to wall with wall mount hook.

Standard Fabric: *Please choose from the Logiflex color chart.*

Chair Fabric: *Please submit a quotation request providing the following information: manufacturer's name, pattern name/number and color name/number. Price available upon request.*

COM Fabric: *(Provided by the customer). For pricing please refer GR2 grade price. COM fabrics must be sent directly to your Customer Service Representative,* ***Prepaid.*** *It is important to indicate the reference number of your purchase order on the package containing your fabric.*

Tackboards with COM Fabric:
30" - 42" tackboards = 1.5 yards
48" - 60" tackboards = 2 yards
66" - 72" tackboards = 2.5 yards
84" tackboards = 3 yards

Wall Mounting Spacers

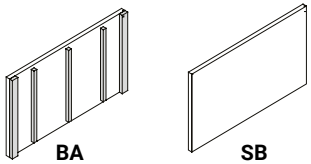

BA
Side and middle spacers

SB
Without Spacers

Prices

Dimensions A B	GRA	GR1	GR2	GR3	GR4	GR5	GR6	GR7	GR8	GR9	GR10	GR11	GR12
2430	324	361	408	455	515	575	633	693	753	813	871	991	1 109
2436	324	361	408	455	515	575	633	693	753	813	871	991	1 109
2442	324	361	408	455	515	575	633	693	753	813	871	991	1 109
2448	324	361	408	455	515	575	633	693	753	813	871	991	1 109
2454	324	361	408	455	515	575	633	693	753	813	871	991	1 109
2460	437	473	520	568	627	687	747	805	865	925	985	1 103	1 223
2466	437	473	520	568	627	687	747	805	865	925	985	1 103	1 223
2472	481	525	585	645	719	794	867	942	1017	1091	1 165	1 314	1 463
2484	531	585	656	728	818	906	996	1085	1174	1263	1 353	1 532	1 710

How to Order

		AB		SB **BA (std)**	GR1 GR2 GR3 GR4 GR5 COM	See Logiflex color chart or COM fabric number
	MA		**TBW**			
	series	dimensions	code	mounting spacers	fabric	fabric
Example	**MA**	2442	TBW	BA	GR1	

Bookcases and Cabinets

30" Bookcases with Laminate Back

BBL1230

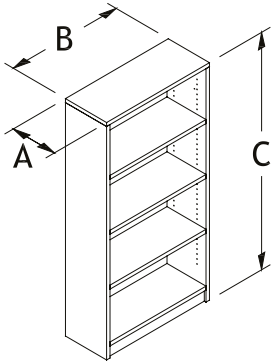

BBL1530

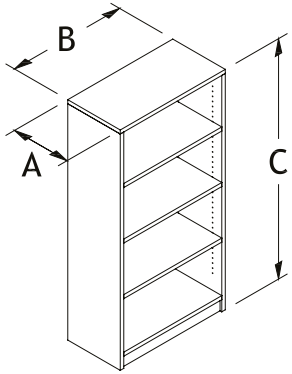

BBL2030

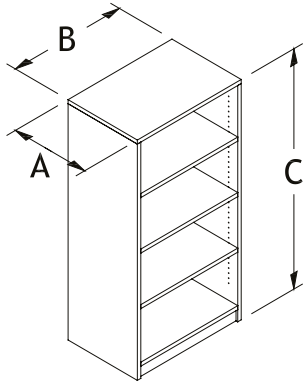

Manufacturing Standards

- 1" thick adjustable shelves;
- 2 1/2"H kick plate;
- Shelf brackets;
- Laminate back.

Number of adjustable shelves included:
Less than 29" H: 1 shelf, 36" - 47"H: 2 shelves, 48" - 65"H: 3 shelves, 66" - 83"H: 4 shelves, 84"H and more: 5 shelves.

Adjustable shelves (SH): *see Appendix G for prices, p. 16*

Options

Adjustable Shelves

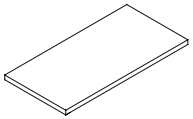

SH

Prices

Dimensions A B C	MA	MAL
123029	668	791
123036	711	
123042	758	
123048	784	
123054	816	
123060	835	
123066	890	
123072	1050	
123084	1134	
153029	743	873
153036	784	
153042	835	
153048	860	
153054	890	
153060	912	
153066	964	
153072	1126	
153084	1186	
203029	809	945
203036	849	
203042	900	
203048	926	
203054	954	
203060	973	
203066	1028	
203072	1186	
203084	1250	

How to Order

	MA MAL		ABC	SH
		BBL		
	series	code	dimensions	shelves
Example	MA	**BBL**	153029	SH

36" Bookcases with Laminate Back

BBL1236

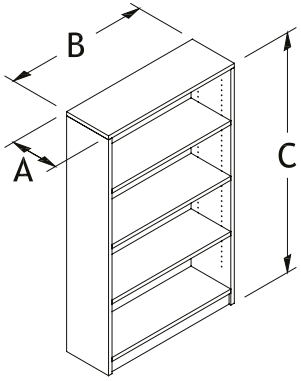

BBL1536

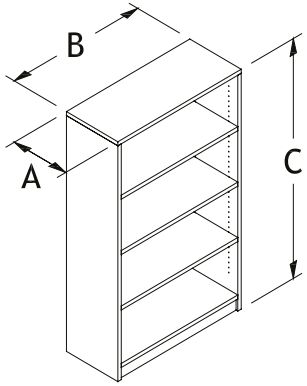

BBL2036

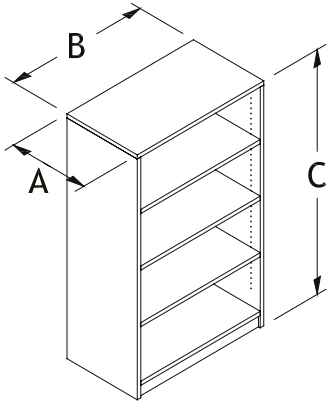

Manufacturing Standards

- 1" thick adjustable shelves;
- 2 1/2"H kick plate;
- Shelf brackets;
- Laminate back.

Number of adjustable shelves included:
Less than 29" H: 1 shelf, 36" - 47"H: 2 shelves, 48" - 65"H: 3 shelves, 66" - 83"H: 4 shelves, 84"H and more: 5 shelves.

Adjustable shelves (SH): *see Appendix G for prices, p. 16*

Prices

Dimensions A B C	MA	MAL
123629	711	835
123636	752	
123642	809	
123648	825	
123654	860	
123660	881	
123666	931	
123672	1093	
153629	794	933
153636	835	
153642	890	
153648	912	
153654	946	
153660	964	
153666	1018	
153672	1175	
203629	860	1003
203636	900	
203642	954	
203648	973	
203654	1008	
203660	1028	
203666	1080	
203672	1239	

Options

Adjustable Shelves

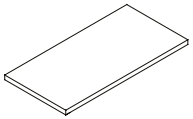

SH

How to Order

	MA MAL		ABC	SH
		BBL		
	series	code	dimensions	shelves
Example	MA	**BBL**	153629	SH

Wardrobes with One Door

VL

Door opening to the left

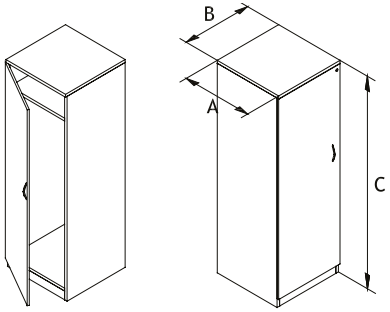

VR

Door opening to the right

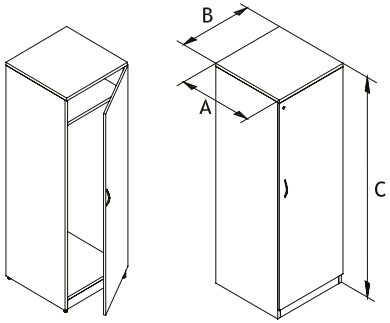

Manufacturing Standards

- Fixed shelf (8" clearance between shelf and top);
- Clothes rail;
- HJAB handle;
- Lock;
- 5/8" laminate back;
- Ventilation grill in back panel.

Handle: *For a handle other than HJAB standard, please choose from the Logiflex list at no extra charge.*

Prices

Dimensions A B C	MA
201866	954
202466	1096
241866	1166
242466	1271
201872	1038
202472	1143
241872	1250
242472	1354
201884	1213
202484	1336
241884	1427
242484	1526

How to Order

	MA	ABC	VL VR	**HJAB (std)**
	series	dimension	code	handles (p. 110)
Example	MA	202466	VL	HJAB

Wardrobes with One Glass Door

VLFL

Door opening to the left

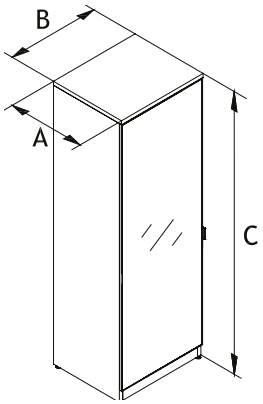

VRFL

Door opening to the right

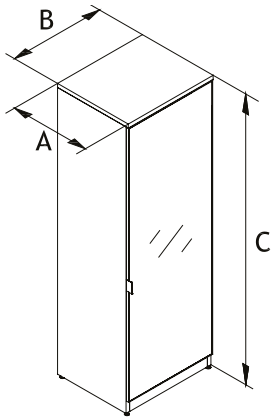

Manufacturing Standards

- White glass (V4) doors with aluminum-frame and built-in handle;
- Soft-close door;
- Clothes rail;
- 5/8" laminate back;
- Fixed shelf (8" clearance between shelf and top);
- Ventilation grill in back panel.

Glass: *If the choice of glass is not specified, the standard is white glass (V4). For other choices of glass, consult the Logiflex color chart.*

Prices

Dimensions A B C	MA
201866	2139
202466	2608
241866	2382
242466	2852
201872	2336
202472	2830
241872	2579
242472	3075
201884	2809
202484	3362
241884	3052
242484	3586

How to Order

	MA	ABC	VLFL VRFL	KB PL **V4 (std)**
	series	dimension	code	glass
Example	MA	202466	VLFL	V4

Wardrobes with Two Doors

V

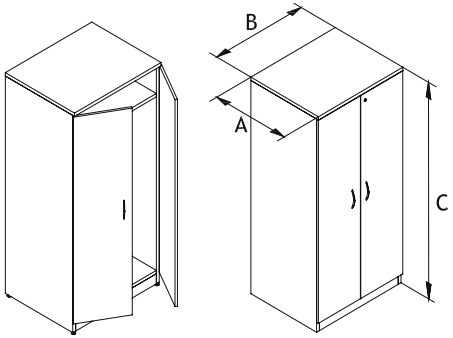

Manufacturing Standards

- Fixed shelf (8" clearance between shelf and top);
- Clothes rail;
- HJAB handles;
- Lock;
- 5/8" laminate back;
- Ventilation grill in back panel.

Handles: *For handles other than HJAB standard, please choose from the Logiflex list at no extra charge.Â*

Prices

Dimensions A B C	MA
203066	1378
203666	1462
243066	1593
243666	1678
203072	1462
203672	1638
243072	1678
243672	1760
203084	1755
243084	1981

How to Order

	MA	ABC		HJAB (std)
			V	
	series	dimension	code	handles (p. 110)
Example	MA	203066	**V**	HJAB

Wardrobes with Two Glass Doors

VFL

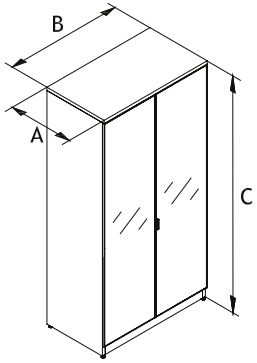

Manufacturing Standards

- White glass (V4) doors with aluminum-frame and built-in handle;
- Soft-close doors;
- Clothes rail;
- Fixed shelf (8" clearance between shelf and top);
- 5/8" laminate back;
- Ventilation grill in back panel.

Glass: *If the choice of glass is not specified, the standard is white glass (V4). For other choices of glass, consult the Logiflex color chart.*

Prices

Dimensions A B C	MA
203066	3085
203666	3534
243066	3334
243666	3767
203072	3303
203672	3790
243072	3559
243672	4005
203084	3976
243084	4158

How to Order

	MA	ABC		KB PL **V4 (std)**
			VFL	
	series	dimension	code	glass
Example	MA	203066	**VFL**	V4

Wardrobes with Two Doors and Cabinet

ARV

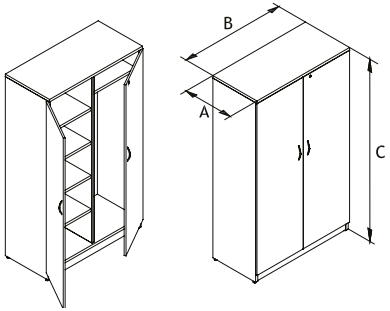

VAR

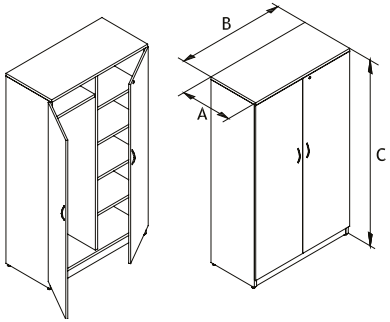

Manufacturing Standards

- Adjustable shelves;
- Shelf brackets;
- Fixed shelf (8" clearance between shelf and top);
- Clothes rail;
- HJAB handles;
- Lock;
- 5/8" laminate back;
- Ventilation grill in back panel.

Handles: *For handles other than HJAB standard, please choose from the Logiflex list at no extra charge.*

Additional shelves (SH):
66" H - 72" H: 4 shelves / 84" high: 5 adjustable.
Additional shelves, see Appendix G for prices, p. 16

Options

Additional Shelves

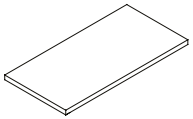

SH

Prices

Dimensions A B C	MA
202466	1779
203066	1864
203666	1951
242466	1909
243066	1994
243666	2076
202472	1909
203072	1994
203672	2076
242472	2035
243072	2120
243672	2203
202484	2197
203084	2288
242484	2320
243084	2415

How to Order

	MA	ABC	ARV VAR	**HJAB (std)**	SH
	series	dimension	code	handles (p. 110)	shelves
Example	MA	202466	ARV	HJAB	SH

Wardrobe on Right and Cabinet with Pedestal on Left

AREV

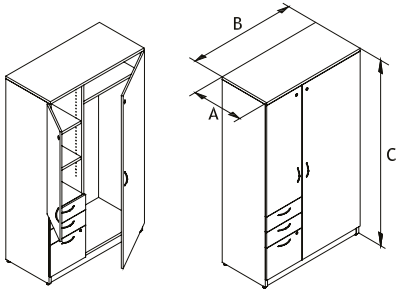

ARFV

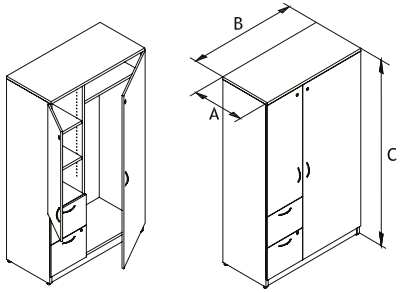

Manufacturing Standards

- 2 utilty drawers and 1 file drawer or 2 file drawers;
- 2 adjustable shelves;
- Shelf brackets;
- Fixed shelf;
- Clothes rail;
- HJAB handles;
- Locks;
- 5/8" laminate back;
- Ventilation grill in back panel.

Handles: *For handles other than HJAB standard, please choose from the Logiflex list at no extra charge.*

Additional shelves (SH): *see Appendix G for prices, p. 16*

Prices

Dimensions A B C	MA	Wardrobe Interior Width
202466	2528	6-7/8"
203066	2607	12-7/8"
203666	2693	18-7/8"
242466	2620	6-7/8"
243066	2724	12-7/8"
243666	2831	18-7/8"
202472	2607	6-7/8"
203072	2693	12-7/8"
203672	2775	18-7/8"
242472	2719	6-7/8"
243072	2821	12-7/8"
243672	3006	18-7/8"
202484	2856	6-7/8"
203084	2984	12-7/8"
242484	2999	6-7/8"
243084	3178	12-7/8"

Options

Additional Shelves

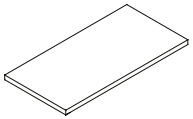

SH

How to Order

	MA	ABC	AREV ARFV	**HJAB (std)**	SH
	series	dimension	code	handles (p. 110)	shelves
Example	MA	203066	AREV	HJAB	SH

Wardrobe on Left and Cabinet with Pedestal on Right

VARE

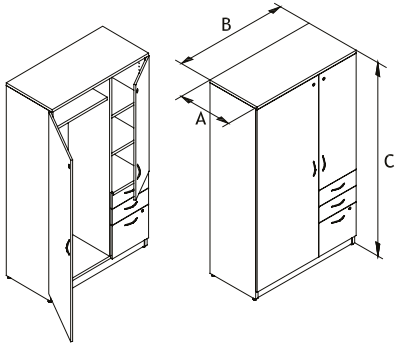

VARF

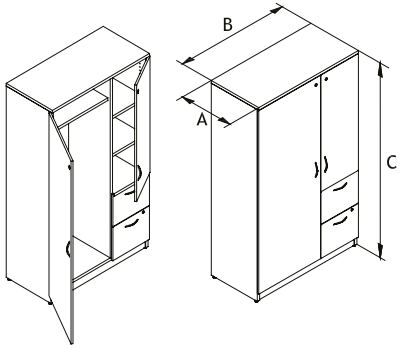

Manufacturing Standards

- 2 utilty drawers and 1 file drawer or 2 file drawers;
- 2 adjustable shelves;
- Shelf brackets;
- Fixed shelf;
- Clothes rail;
- HJAB handles;
- Locks;
- 5/8" laminate back;
- Ventilation grill in back panel.

Handles: *For handles other than HJAB standard, please choose from the Logiflex list at no extra charge.*

Additional shelves (SH): *see Appendix G for prices, p. 16*

Prices

Dimensions A B C	MA	Wardrobe Interior Width
202466	2528	6-7/8"
203066	2607	12-7/8"
203666	2693	18-7/8"
242466	2620	6-7/8"
243066	2724	12-7/8"
243666	2831	18-7/8"
202472	2607	6-7/8"
203072	2693	12-7/8"
203672	2775	18-7/8"
242472	2719	6-7/8"
243072	2821	12-7/8"
243672	3006	18-7/8"
202484	2856	6-7/8"
203084	2984	12-7/8"
242484	2999	6-7/8"
243084	3178	12-7/8"

Options

Additional Shelves

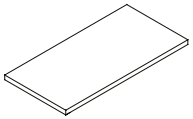

SH

How to Order

	MA	ABC	VARE VARF	**HJAB (std)**	SH
	series	dimension	code	handles (p. 110)	shelves
Example	MA	203066	VARE	HJAB	SH

Cabinets with One Door

ARL

Door opening to the left

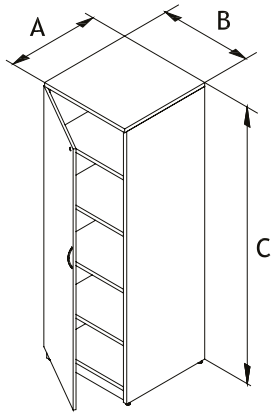

ARR

Door opening to the right

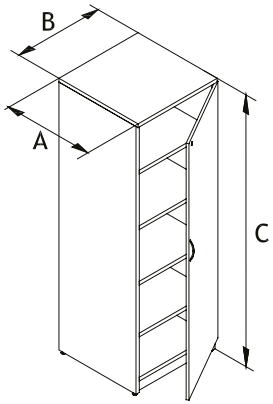

Manufacturing Standards

- Adjustable shelves;
- Shelf brackets;
- HJAB handle;
- Lock;
- 5/8" laminate back.

Number of adjustable shelves included:
Less than 29" H: 1 shelf, 36" - 47"H: 2 shelves, 48" - 65"H: 3 shelves, 66" - 83"H: 4 shelves, 84"H and more: 5 shelves.

Handle: *For a handle other than HJAB standard, please choose from the Logiflex list at no extra charge.*

Additional shelves (SH): *see Appendix G for prices, p. 16*

Options

Additional Shelves

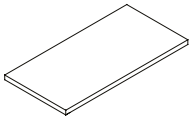

SH

How to Order

	MA	ABC	ARL ARR	**HJAB (std)**	SH
	series	dimensions	code	handles (p. 110)	shelves
Example	MA	241866	ARL	HJAB	SH

Prices

Dimensions A B C	MA
201866	1166
202466	1271
241866	1378
242466	1485
201872	1250
202472	1406
241872	1462
242472	1569
201884	1339
202484	1540
241884	1550
242484	1650

Cabinets with One Glass Door

ARLFL

Door opening to the left

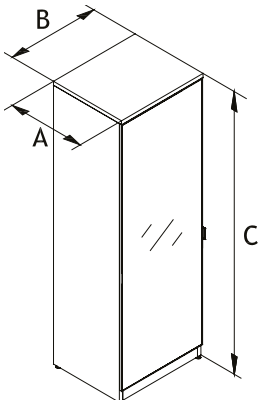

ARRFL

Door opening to the right

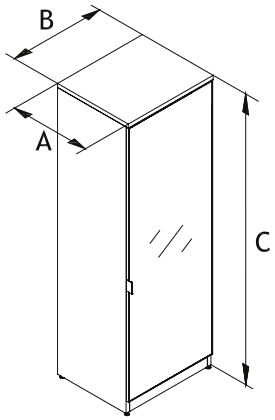

Manufacturing Standards

- White glass (V4) doors with aluminum-frame and built-in handle;
- Soft-close door;
- Adjustable shelves;
- Shelf brackets;
- 5/8" laminate back.

Number of adjustable shelves included:
Less than 29" H: 1 shelf, 36" - 47"H: 2 shelves, 48" - 65"H: 3 shelves, 66" - 83"H: 4 shelves, 84"H and more: 5 shelves.

Glass: *If the choice of glass is not specified, the standard is white glass (V4). For other choices of glass, consult the Logiflex color chart.*

Additional shelves (SH): *see Appendix G for prices, p. 16*

Options

Additional Shelves

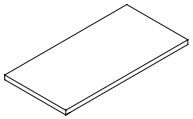

SH

How to Order

	MA	ABC	ARLFL ARRFL	KB PL **V4 (std)**	SH
	series	dimensions	code	glass	shelves
Example	MA	241866	ARLFL	V4	SH

Prices

Dimensions A B C	MA
201866	2382
202466	2852
241866	2630
242466	3093
201872	2579
202472	2860
241872	2821
242472	3318
201884	2775
202484	2717
241884	2854
242484	3348

Cabinets with Two Doors

AR1530

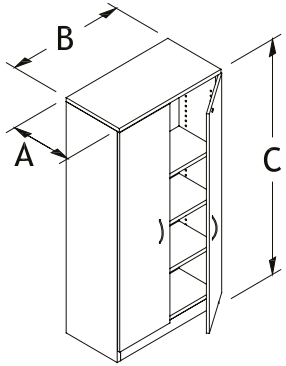

AR1536

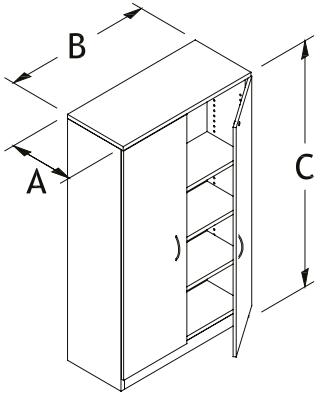

Manufacturing Standards

- Adjustable shelves;
- Shelf brackets;
- HJAB handles;
- Lock;
- 5/8" laminate back.

Number of adjustable shelves included:
Less than 29" H: 1 shelf, 36" - 47"H: 2 shelves, 48" - 65"H: 3 shelves, 66" - 83"H: 4 shelves, 84"H and more: 5 shelves.

Handles: *For handles other than HJAB standard, please choose from the Logiflex list at no extra charge.*

Additional shelves (SH): *see Appendix G for prices, p. 16*

Options

Additional Shelves

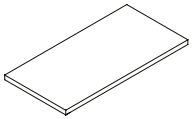

SH

How to Order

	MA MAL	ABC		HJAB (std)	SH
			AR		
	series	dimensions	code	handles (p. 110)	shelves
Example	MA	153029	**AR**	HJAB	SH

Prices

Dimensions A B C	MA	MAL
153029	912	1084
153036	1008	
153041	1126	
153048	1239	
153053	1315	
153060	1436	
153066	1504	
153072	1610	
153084	1712	
153629	996	1189
153636	1089	
153641	1208	
153648	1321	
153653	1424	
153660	1473	
153666	1560	
153672	1659	

Cabinets With Two Doors

AR2030

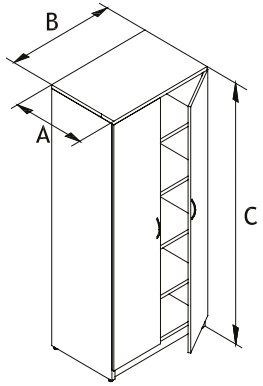

AR2036

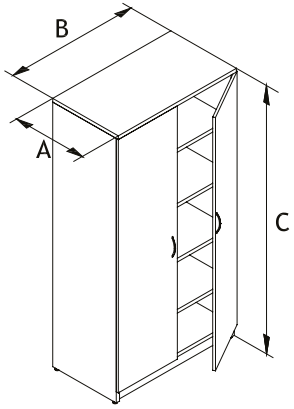

AR2042

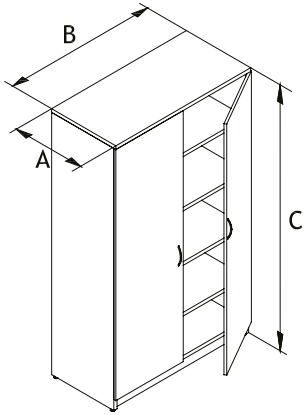

Manufacturing Standards

- Adjustable shelves;
- Shelf brackets;
- HJAB handles;
- Lock;
- 5/8" laminate back.

Number of adjustable shelves included:
Less than 29" H: 1 shelf, 36" - 47"H: 2 shelves, 48" - 65"H: 3 shelves, 66" - 83"H: 4 shelves, 84"H and more: 5 shelves.

Handles: *For handles other than HJAB standard, please choose from the Logiflex list at no extra charge.*

Additional shelves (SH): *see Appendix G for prices, p. 16*

Options

Additional Shelves

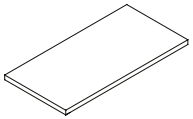

SH

Prices

Dimensions A B C	MA	MAL
203029	1038	1223
203036	1134	
203041	1250	
203048	1367	
203053	1462	
203060	1566	
203066	1635	
203072	1739	
203084	1842	
203629	1126	1328
203636	1218	
203641	1339	
203648	1451	
203653	1552	
203660	1602	
203666	1692	
203672	1788	
204229	1297	1518
204236	1386	
204241	1501	
204248	1613	
204253	1708	
204260	1760	

How to Order

	MA MAL	ABC		HJAB (std)	SH
			AR		
	series	dimensions	code	handles (p. 110)	shelves
Example	MA	203629	**AR**	HJAB	SH

Cabinets with Two Doors

AR2430

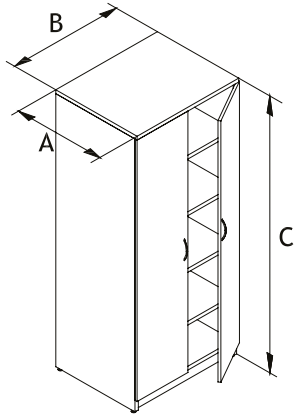

AR2436

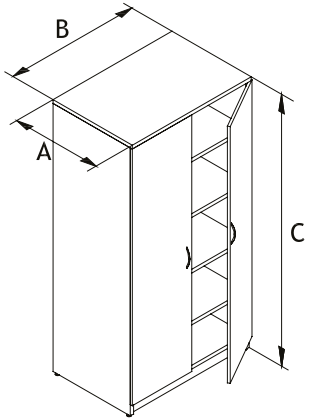

AR2442

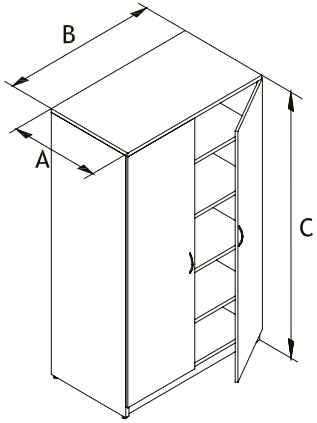

Manufacturing Standards

- Adjustable shelves;
- Shelf brackets;
- HJAB handles;
- Lock;
- 5/8" laminate back.

Number of adjustable shelves included:
Less than 29" H: 1 shelf, 36" - 47"H: 2 shelves, 48" - 65"H: 3 shelves, 66" - 83"H: 4 shelves, 84"H and more: 5 shelves.

Handles: *For handles other than HJAB standard, please choose from the Logiflex list at no extra charge.*

Additional shelves (SH): *see Appendix G for prices, p. 16*

Options

Additional Shelves

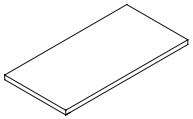

SH

Prices

Dimensions A B C	MA	MAL
243029	1166	1395
243036	1263	
243041	1378	
243048	1492	
243053	1593	
243060	1662	
243066	1735	
243072	1830	
243084	2009	
243629	1250	1471
243636	1345	
243641	1462	
243648	1575	
243653	1678	
243660	1729	
243666	1803	
243672	1915	
244229	1336	1566
244236	1424	
244241	1532	
244248	1643	
244253	1742	
244260	1838	

How to Order

	MA MAL	ABC		**HJAB (std)**	SH
			AR		
	series	dimensions	code	handles (p. 110)	shelves
Example	MA	243629	**AR**	HJAB	SH

Cabinets with Two Glass Doors

ARFL2030

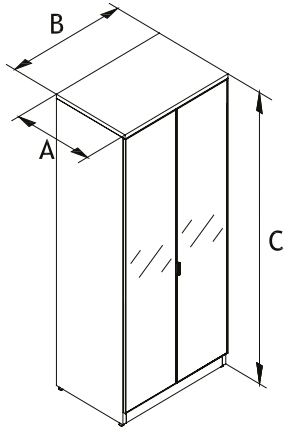

ARFL2036

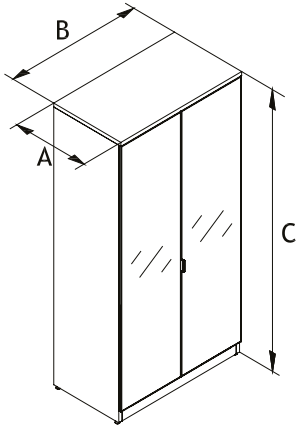

ARFL2042

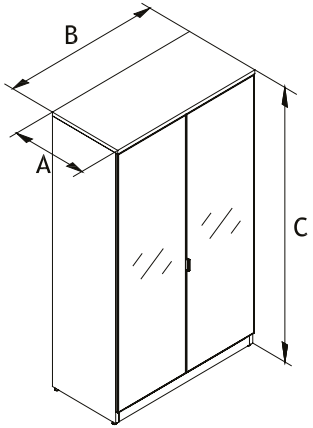

Manufacturing Standards

- White glass (V4) doors with aluminum-frame and built-in handle;
- Soft-close doors;
- Adjustable shelves;
- Shelf brackets;
- 5/8" laminate back.

Number of adjustable shelves included:
Less than 29"H: 1 shelf, 36" - 47"H: 2 shelves, 48" - 65"H: 3 shelves, 66" - 83"H: 4 shelves, 84"H and more: 5 shelves.

Glass: *If the choice of glass is not specified, the standard is white glass (V4). For other choices of glass, consult the Logiflex color chart.*

Additional shelves (SH): *see Appendix G for prices, p. 16*

Options

Additional Shelves

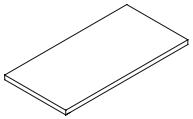

SH

Prices

Dimensions A B C	MA	MAL
203029	1963	2254
203036	2258	
203041	2543	
203048	2830	
203053	3098	
203060	3311	
203066	3557	
203072	3810	
203084	4289	
203629	2218	2542
203636	2536	
203641	2861	
203648	3178	
203653	3476	
203660	3721	
203666	3996	
203672	4279	
204229	2415	2763
204236	2776	
204241	3121	
204248	3468	
204253	3790	
204260	4069	

How to Order

	MA MAL	ABC		KB PL **V4 (std)**	SH
			ARFL		
	series	dimensions	code	glass	shelves
Example	MA	203629	**ARFL**	V4	SH

Cabinets with Two Glass Doors

ARFL2430

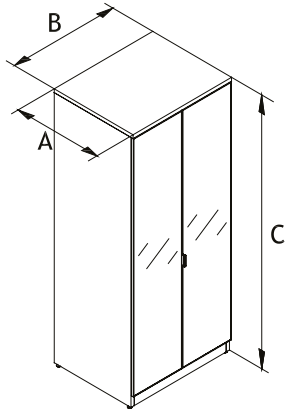

ARFL2436

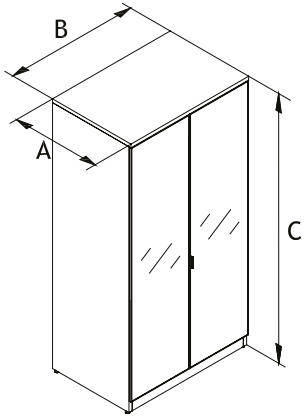

ARFL2442

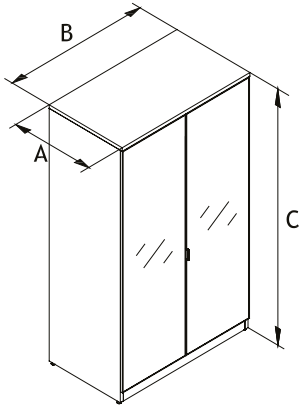

Manufacturing Standards

- White glass (V4) doors with aluminum-frame and built-in handle;
- Soft-close doors;
- Adjustable shelves;
- Shelf brackets;
- 5/8" laminate back.

Number of adjustable shelves included:
Less than 29"H: 1 shelf, 36" - 47"H: 2 shelves, 48" - 65"H: 3 shelves, 66" - 83"H: 4 shelves, 84"H and more: 5 shelves.

Glass: *If the choice of glass is not specified, the standard is white glass (V4). For other choices of glass, consult the Logiflex color chart.*

Additional shelves (SH): *see Appendix G for prices, p. 16*

Options

Additional Shelves

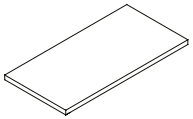

SH

Prices

Dimensions A B C	MA	MAL
243029	2089	2390
243036	2379	
243041	2666	
243048	2956	
243053	3225	
243060	3436	
243066	3679	
243072	3932	
243084	4411	
243629	2339	2680
243636	2663	
243641	2985	
243648	3301	
243653	3602	
243660	3846	
243666	4119	
243672	4402	
244229	2536	2896
244236	2900	
244241	3247	
244248	3595	
244253	3915	
244260	4195	

How to Order

	MA MAL	ABC		KB PL **V4 (std)**	SH
			ARFL		
	series	dimensions	code	glass	shelves
Example	MA	243629	**ARFL**	V4	SH

Multiple Units

MU4

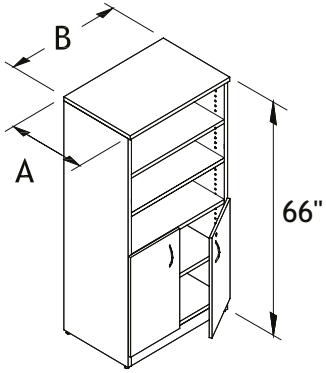

Manufacturing Standards

- Adjustable shelves;
- Shelf bracket;
- HJAB handles;
- Lock;
- 5/8" laminate back.

Handles: *For handles other than HJAB standard, please choose from the Logiflex list at no extra charge.*

Additional shelves (SH): *see Appendix G for prices, p. 16*

Options

Additional Shelves

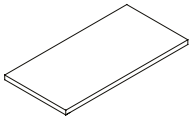

SH

Prices

MU4 - Height: 66", 3 adjustable shelves

Dimensions A B	MA
2030	1566
2036	1620
2430	1775
2436	1829

How to Order

	MA	AB			**HJAB (std)**	SHA	SHB
			MU	**4**			
	series	dimension	code	number	handles (p. 110)	cabinet shelves	bookshelf shelves
Example	MA	2030	**MU**	4	HJAB		

Multiple Units

MU5

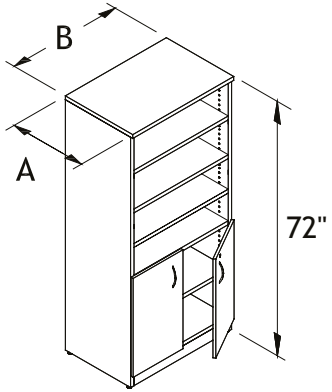

Manufacturing Standards

- Adjustable shelves;
- Shelf bracket;
- HJAB handles;
- Lock;
- 5/8" laminate back.

Handles: *For handles other than HJAB standard, please choose from the Logiflex list at no extra charge.*

Additional shelves (SH): *see Appendix G for prices, p. 16*

Options

Additional Shelves

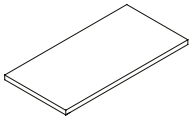

SH

Prices

MU5 - Height: 72", 4 adjustable shelves

Dimensions A	B MA
2030	1620
2036	1673
2430	1829
2436	1882

How to Order

	MA	AB		5	**HJAB (std)**	SHA	SHB
			MU				
	series	dimension	code	number	handles (p. 110)	cabinet shelves	bookshelf shelves
Example	MA	2030	**MU**	5	HJAB		

Multiple Units

MU23

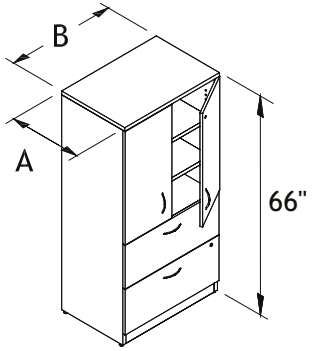

MU24

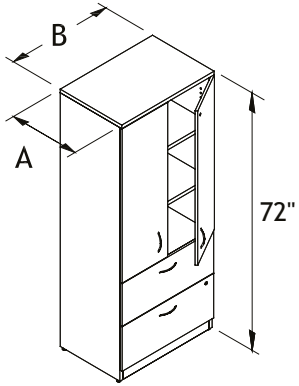

Manufacturing Standards

- Adjustable shelves;
- Shelf bracket;
- 2 lateral file drawers;
- 2 crossbars per file drawer;
- HJAB handles;
- Lock;
- 5/8" laminate back.

Handles: *For handles other than HJAB standard, please choose from the Logiflex list at no extra charge.*

Additional shelves (SH): *see Appendix G for prices, p. 16*

Options

Additional Shelves

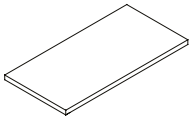

SH

How to Order

	MA	AB		23 24	**HJAB (std)**	SH
			MU			
	series	dimension	code	number	handles (p. 110)	shelves
Example	MA	2030	**MU**	24	HJAB	SH

Prices

MU23 - Height: 66", 2 adjustable shelves

Dimensions A B	MA
2030	2490
2036	2701
2430	2699
2436	2911

MU24 - Height: 72", 2 adjustable shelves

Dimensions A B	MA
2030	2596
2036	2809
2430	2807
2436	3019

Multiple Units

MU23FL

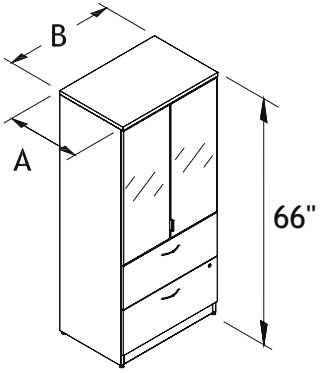

MU24FL

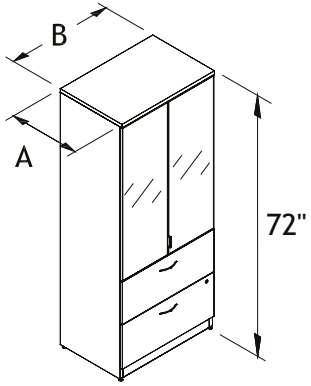

Manufacturing Standards

- White glass (V4) doors with aluminum-frame and built-in handle;
- Soft-close doors;
- Adjustable shelves;
- Shelf bracket;
- 2 lateral file drawers;
- Lock;
- HJA handles;
- 5/8" laminate back.

Glass: *If the choice of glass is not specified, the standard is white glass (V4). For other choices of glass, consult the Logiflex color chart.*

Handles: *For handles other than HJA standard, please choose from the Logiflex list at no extra charge.*

Additional shelves (SH): *see Appendix G for prices, p. 16*

Options

Additional Shelves

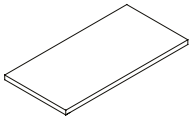

SH

How to Order

	MA	AB		23FL 24FL	KB PL **V4 (std)**	**HJA (std)**	SH
			MU				
	series	dimension	code	number	glass	handles (p. 110)	shelves
Example	MA	2030	**MU**	24FL	V4	HJA	SH

Prices

MU23FL - Height: 66", 2 adjustable shelves

Dimensions A B	MA
2030	3550
2036	3941
2430	3671
2436	4060

MU24FL - Height: 72", 2 adjustable shelves

Dimensions A B	MA
2030	3807
2036	4215
2430	3923
2436	4331

Accessories

Handles

HJA

Handle

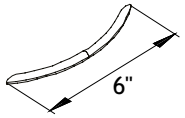

- 6" metal handle;
- 5-1/32" (128mm) center to center.

Code	$	Description
HJA	15	*Satin Nickel*
HJAB	15	*Black*

H011

Handle

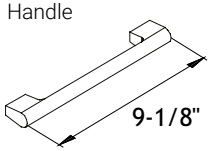

- 9-1/8" metal handle;
- 8-13/16" (224mm) center to center.

Code	$	Description
H011	15	*Satin Nickel*

H051

Handle

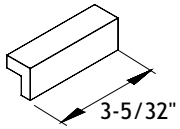

- 3-5/32" metal handle;
- 2-17/32" (64mm) center to center.

Code	$	Description
H051CHR	15	
H051SN	15	
H051BL	15	
H051WH	15	

H052

Handle

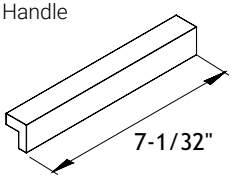

- 7-1/32" metal handle;
- 6-9/32" (160mm) center to center.

Code	$	Description
H052CHR	15	*Chrome*
H052SN	15	*Satin Nickel*
H052BL	15	*Black*
H052WH	15	*White*

H060

Handle

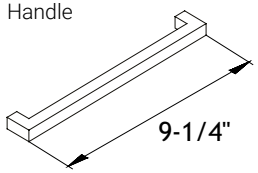

- 9-1/4" metal handle;
- 8-3/4" (222.25mm) center to center.

Code	$	Description
H060BN	15	*Brushed Nickel*
H060CHR	15	*Chrome*

H070

Handle

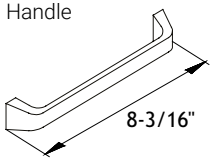

- 8-3/16" metal handle;
- 7-1/2" (190.5mm) center to center.

Code	$	Description
H070BN	15	*Brushed Nickel*
H070CHR	15	*Chrome*

H071

Handle

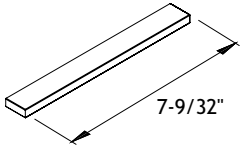

- 7-9/32" metal handle;
- 6-5/16" (160.338mm) center to center.

Code	$	Description
H071CHR	15	*Chrome*
H071BN	15	*Brushed Nickel*
H071BL	15	*Black*
H071WH	15	*White*

H072

Handle

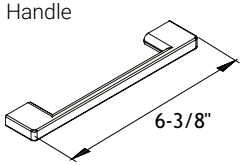

- 6-3/8" metal handle;
- 5-1/32" (127.8mm) center to center.

Code	$	Description
H072CHR	15	
H072BL	15	
H072WH	15	

SXP002

Handle

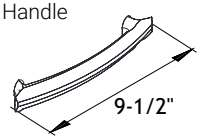

- 9-1/2" metal handle;
- 7-9/16" (192mm) center to center.

Code	$	Description
SXP002	15	*Satin Nickel*

SXP003

Handle

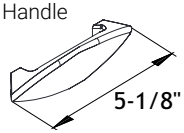

- 5-1/8" metal handle;
- 3-25/32" (96mm) center to center.

Code	$	Description
SXP003	15	

Legs

4.5

Round Leg

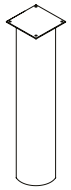

- Fixed round metal leg / on leveler;
- 4-1/2" diameter;
- 6" x 6" end plate;
- Finish: Black (BL) and Satin Nickel (SN);
- Height: 27-1/2".

Code	$	Description
4.5BL	275	*Black*
4.5SN	275	*Satin Nickel*

IFN

Round Leg

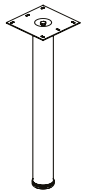

- Fixed round metal leg / on leveler;
- 2-1/2" diameter;
- 3-3/4" x 3-3/4" end plate screwed to the leg;
- Finish: Black (BL) and Satin Nickel (SN);
- Height: 27-1/2".

Code	$	Description
IFNBL	96	*Black*
IFNSN	96	*Satin Nickel*

IFW

Round Leg

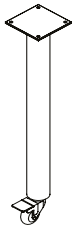

- Fixed round metal leg;
- 2-1/2" diameter;
- Locking wheel;
- 3-3/4" x 3-3/4" end plate;
- Finish: Black (BL) and Satin Nickel (SN);
- Height: 28".

Code	$	Description
IFWBL	169	*Black*
IFWSN	169	*Satin Nickel*

IAWF

Round Leg

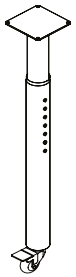

- Round metal leg;
- 2-1/2" diameter;
- Locking wheel;
- 5" x 5" end plate;
- Finish: Black (BL) and Satin Nickel (SN);
- Height: Adjustable from 27"H - 34".

Code	$	Description
IAWFBL	276	*Black with locking mechanism*
IAWFSN	276	*Satin Nickel with locking mechanism*

MT

T Leg

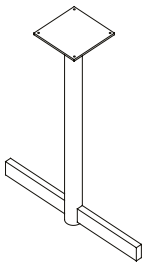

- Fixed metal T leg;
- Base: 22" (CHR), 26", 30" or 36" (BL) and (CHR);
- 8" x 8" end plate;
- Finish: Black (BL) and Chrome (CHR);
- Height: 27-1/2".

Code	$	Description
MT26BL	253	*26" base, Black*
MT30BL	253	*30" base, Black*
MT36BL	253	*36" base, Black*
MT22CHR	253	*22" base, Chrome*
MT26CHR	253	*26" base, Chrome*
MT30CHR	253	*30" base, Chrome*
MT36CHR	253	*36" base, Chrome*

Legs

MY

V Leg

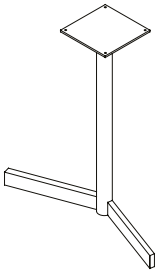

- Fixed metal V leg;
- Base: 26", 30" or 36";
- 8" x 8" end plate;
- Finish: Black (BL) and Chrome (CHR);
- Height: 27-1/2".

Code	$	Description
MY26BL	253	*26" base, Black*
MY30BL	253	*30" base, Black*
MY36BL	253	*36" base, Black*
MY26CHR	253	*26" base, Chrome*
MY30CHR	253	*30" base, Chrome*
MY36CHR	253	*36" base, Chrome*

TF

Deluxe T Leg

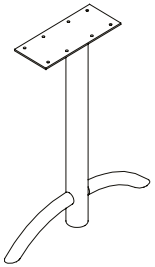

- Fixed Deluxe metal T leg / on levelers;
- Base: 24";
- 5" x 12" end plate;
- Finish: Black (BL) and Satin Nickel (SN);
- Height: 27-1/2".

Code	$	Description
TF24NBL	285	*24" base, Black*
TF24NSN	285	*24" base, Satin Nickel*

MXH44

Heavy Duty Cross Leg

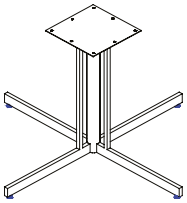

- Fixed Heavy Duty metal cross leg / on leveler;
- Base: 44"
- 12" x 12" end plate;
- Finish: Black (BL);
- Height: 27-1/2".

Code	$	Description
MXH44BL	514	

MXLX

Deluxe Cross Leg

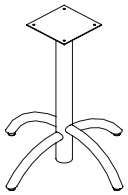

- Fixed Deluxe metal cross leg / on leveler;
- Base: 24", 30" or 36";
- 8" x 8" end plate;
- Finish: Black (BL) and Satin Nickel (SN);
- Height: 27-1/2".

Code	$	Description
MXLX24BL	697	*24" base, Black*
MXLX30BL	697	*30" base, Black*
MXLX36BL	697	*36" base, Black*
MXLX24SN	697	*24" base, Satin Nickel*
MXLX30SN	697	*30" base, Satin Nickel*
MXLX36SN	697	*36" base, Satin Nickel*

MX

Cross Leg

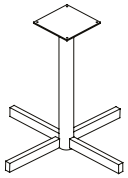

- Fixed metal cross leg;
- Base: 26", 30"or 36";
- 8" x 8" end plate;
- Finish: Black (BL) and Chrome (CHR);
- Height: 27-1/2".

Code	$	Description
MX26BL	279	*26" base, Black*
MX30BL	328	*30" base, Black*
MX36BL	328	*36" base, Black*
MX26CHR	328	*26" base, Chrome*
MX30CHR	328	*30" base, Chrome*
MX36CHR	328	*36" base, Chrome*

Legs

HATLEY

Fixed Leg

- Set of two 28" tapered legs with wood insert;
- 4" x 4" end plate;
- Finish: Satin Nickel (SN) and Chrome (CHR);
- Height: 28".

Code	$	Description
HATSN	355	
HATCHR	355	
HATBL	355	

Varnish and Stain Colors of Wooden Insert

GW	Golden Wheat	**PN**	Pecan
WW	White Wash	**CF**	Coffee
CT	Chestnut	**BR**	Brandy
ES	Espresso	**BK**	Bark
AT	Apricot	**SD**	Sand
BW	Black Wash	**BO**	Bordeaux

For stability reasons, please check with your account manager the dimensions of your furniture when ordering these legs separately from the surface.

MAGOG

Fixed Leg

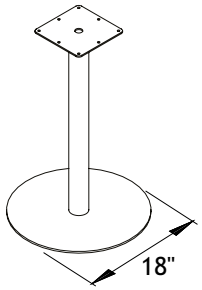

- Fixed Magog leg;
- Base: 18";
- 8" x 8" end plate;
- Finish: Satin Nickel (SN), Black (BL) and Chrome (CHR);
- Height: 28".

Code	$	Description
MAGSN	618	*Satin Nickel*
MAGBL	618	*Black*
MAGCHR	1261	*Chrome*
MAGWH	618	*White*

For stability reasons, please check with your account manager the dimensions of your furniture when ordering this leg separately from the surface.

LENNOX

Fixed Leg

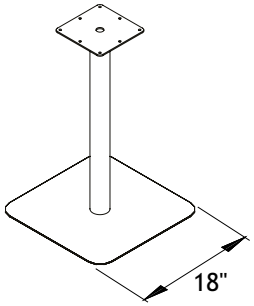

- Fixed Lennox leg;
- Base: 18";
- 8" x 8" end plate;
- Finish: Satin Nickel (SN), Black (BL) and Chrome (CHR);
- Height: 28".

Code	$	Description
LENSN	618	*Satin Nickel*
LENBL	618	*Black*
LENCHR	1261	*Chrome*
LENWH	618	*White*

For stability reasons, please check with your account manager the dimensions of your furniture when ordering this leg separately from the surface.

RA2

Angled Rectangular Leg

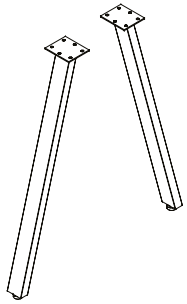

- Set of 2 angled rectangular metal legs;
- Dimensions: 2" x 1";
- Finish: Satin Nickel (SN) and Black (BL);
- Height: 28".

Code	$	Description
RA2SN	203	*Satin Nickel*
RA2BL	203	*Black*
RA2WH	203	*White*

For stability reasons, please check with your account manager the dimensions of your furniture when ordering this leg separately from the surface.

Keyboard Trays

KB360M

Keyboard Tray

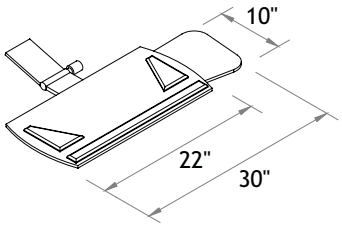

- Black plastic 24-1/2"wide retractable ergonomic keyboard;
- Lift-N-Lock spring system (no lever) to adjust height;
- Handle for easy tilt adjustment from 10" to 15";
- 10" x 7-1/2" mouse tray;
- 19" black gel wrist rest;
- 360º rotation.

Code	$	Description
KB360M	665	

KB

Keyboard Tray

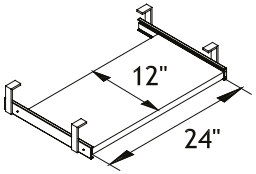

- 24" wide keyboard tray only;
- 5/8" and 1" thick laminate;
- Adjustable height from 1-3/4" to 2-3/4" / additional 2" for slides.

Code	$	Description
KB	210	*1" thick laminate*
KBT	198	*5/8" thick laminate*

KBMOD

Keyboard Tray

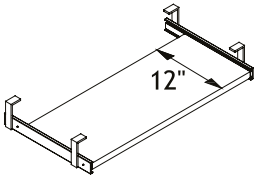

- Keyboard tray, available in lengths from minimum 24" to maximum 30";
- 5/8" and 1" thick laminate;
- Adjustable height from 1-3/4 to 2-3/4" / additional 2" for slides.

Code	$	Description
KBMOD	252	*1" thick laminate*
KBMODT	240	*5/8" thick laminate*

To order, for example a 27" long keyboard tray, 5/8" thick laminate: KBMODT27

KBMODR

Keyboard Tray

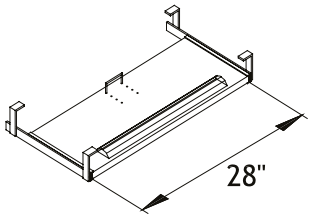

- 28" wide keyboard tray;
- 1" thick laminate;
- Adjustable height from 1-3/4 to 2-3/4" / additional 2" for slides;
- Black gel wrist rest / depth-adjustable stop handles.

Code	$	Description
KBMODR	341	

AP

Wrist Rest

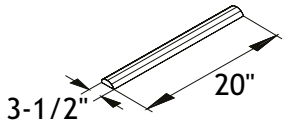

- Black gel wrist rest.

Code	$	Description
AP	80	

CPU Holders

MCPU50

Miniature CPU Holder

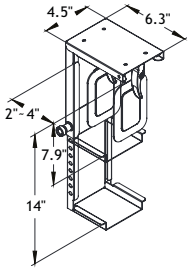

- Height adjustable: 8" - 14";
- Width adjustable: 2" - 4";
- Maximum capacity: 10 kg (22 lbs);
- Need a minimum 5" deep clearance.

Code	$	Description
MCPU50	185	

MCPU90

CPU Holder

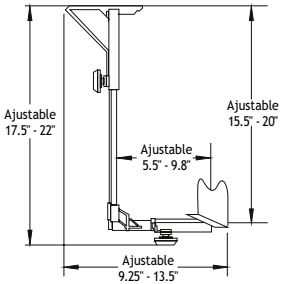

- Black metal CPU holder;
- Easy manipulation;
- Vertical adjustment:
  - Height: 15.5" x 20"
  - Width: 5.5" x 9.8"
- Horizontal adjustment:
  - Height: 17.5" x 22"
  - Width: 9.25" x 13.5"

Code	$	Description
MCPU90	234	*per unit*

CPUIND

CPU Holder

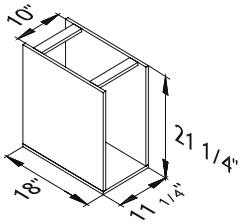

- 5/8" thick laminate CPU holder;
- 10" x 20" interior

Code	$	Description
CPUIND	199	*per unit*

Computer Monitor Brackets

C-1A

Computer Monitor Bracket

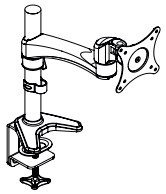

- Computer monitor bracket with fixed arm support;
- Height-adjustable arm;
- Clamp mounted;
- Finish: Black.

Code	$	Description
C-1A	150	

C-1B

Computer Monitor Bracket

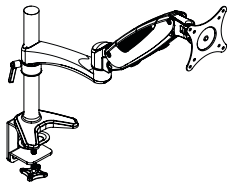

- Computer monitor bracket with flexible arm support;
- Height-adjustable arm;
- Clamp mounted;
- Finish: Black.

Code	$	Description
C-1B	255	

C-2A

Double Computer Monitor Bracket

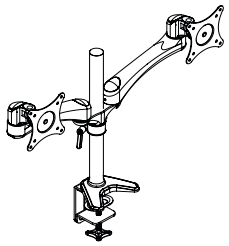

- Double computer monitor bracket with fixed arm support;
- Height-adjustable arms;
- Clamp mounted;
- Finish: Black.

Code	$	Description
C-2A	254	

C-2B

Double Computer Monitor Bracket

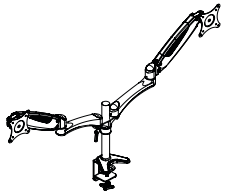

- Double computer monitor bracket with flexible arm support;
- Height-adjustable arms;
- Clamp mounted;
- Finish: Black.

Code	$	Description
C-2B	452	

C-2A-1S

Triple Computer Monitor Bracket

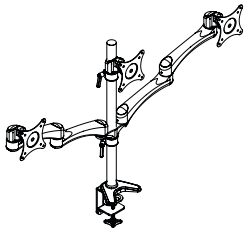

- Triple computer monitor bracket with fixed arm support;
- Height-adjustable arms;
- Clamp mounted;
- Finish: Black.

Code	$	Description
C-2A-1S	438	

C-2B-1S

Triple Computer Monitor Bracket

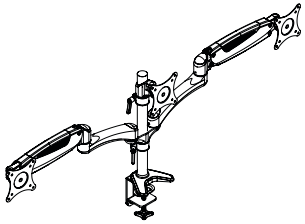

- Triple monitor bracket with 2 flexible arm supports;
- Height-adjustable arms;
- Clamp mounted;
- Finish: Black.

Code	$	Description
C-2B-1S	496	

SHIFT-2A

Shift Double Monitor arm with Docking

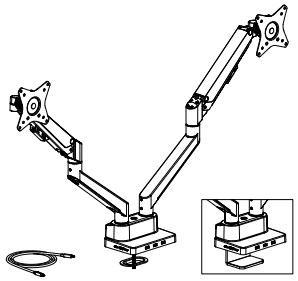

- 17" to 32" dual monitor arm support with flexible arms;
- 75mm and 100mm versa plate;
- Height adjustable arms that holds up to 8 kg (each);
- Clamp or Grommet mounted;
- Finish: Black;
- 8-in-1 Multiport docking station with:
  1 x Type - C Power distribution Port (100w)
  1 x Type - C Upstream port with type C cable included
  3 x USB-A Downstream ports
  2 x HDMI 2.0 Ports
  1 x RJ45 Ethernet port

Power distribution cable not included, follow electronic devices input recommendations.

Code	$	Description
SHIFT-2A	764	

Computer Monitor Brackets

BRSC1M4

Monitor Arm

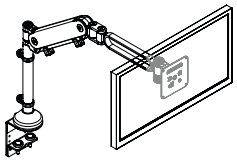

- Monitor arm with height-adjustable arm, clamp-mounted;
- Finish: Satin nickel.

Code	$	Description
BRSC1M4	776	

This is a Human Scale product.

BRSC1M7

Monitor Arm

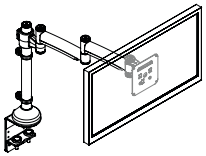

- Monitor arm with fixed-height arm, clamp-mounted;
- Finish: Satin nickel.

Code	$	Description
BRSC1M7	547	

This is a Human Scale product.

BRSC2M4

Double Monitor Arm

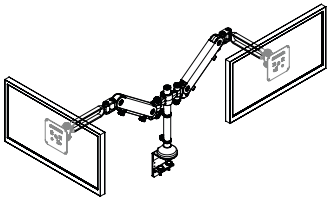

- Double monitor arm with height-adjustable arm, clamp-mounted;
- Finish: Satin nickel.

Code	$	Description
BRSC2M4	1364	

This is a Human Scale product.

BRSC2M7

Double Monitor Arm

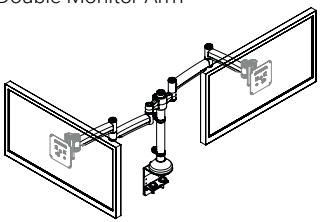

- Double monitor arm with fixed-height arm, clamp-mounted;
- Finish: Satin nickel.

Code	$	Description
BRSC2M7	847	

This is a Human Scale product.

BRSG1M4

Computer Monitor Bracket

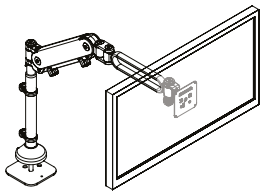

- Computer monitor bracket with height-adjustable arm;
- Grommet mounted;
- Finish: Satin Nickel.

Code	$	Description
BRSG1M4	745	

This is a Human Scale product.

BRSG1M7

Computer Monitor Bracket

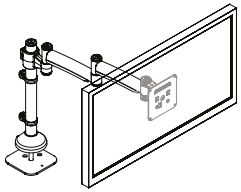

- Computer monitor bracket with fixed-height arm;
- Grommet mounted;
- Finish: Satin Nickel.

Code	$	Description
BRSG1M7	510	

This is a Human Scale product.

BRSG2M4

Double Computer Monitor Bracket

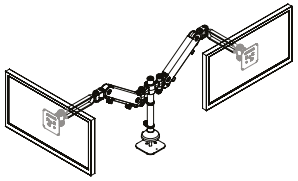

- Double computer monitor bracket with height-adjustable arm;
- Grommet mounted;
- Finish: Satin Nickel.

Code	$	Description
BRSG2M4	1354	

This is a Human Scale product.

BRSG2M7

Double Computer Monitor Bracket

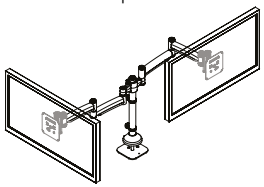

- Double computer monitor bracket with fixed height;
- Grommet mounted;
- Finish: Satin Nickel.

Code	$	Description
BRSG2M7	809	

This is a Human Scale product.

Miscellaneous Accessories

WD

Wire Separators

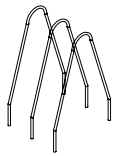

- Set of 3 wire separators.

Code	$	Description
WD	31	*Set of 3*

SB

Suspension Bars

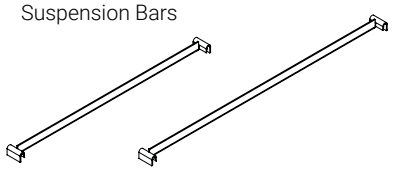

- Short suspension bars: 1 or 2 suspension bars for a left/ right filing for a regular file drawer;
- Long suspension bars: 1 or 2 suspension bars for a front/ back filing for a lateral file drawer.

Code	$	Description
SBV1	7	*1 short suspension bar*
SBV2	14	*2 short suspension bars*
SBH1	7	*1 long suspension bar*
SBH2	14	*2 long suspension bars*

GRILLB

Ventilation Grill

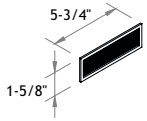

- Black ventilation grill;
- Factory installed only.

Code	$	Description
GRILLB	62	

GRILLW

Ventilation Grill

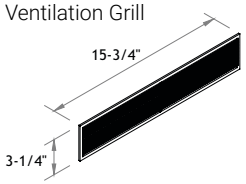

- White ventilation grill;
- Factory installed only.

Code	$	Description
GRILLW	78	

GRILLSN

Ventilation Grill

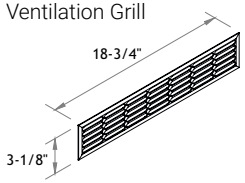

- Satin nickel ventilation grill;
- Factory installed only.

Code	$	Description
GRILLSN	78	

PS

Black Paper Grommet

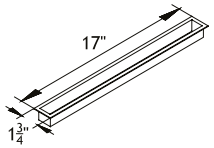

- Black paper grommet, sold sepatately or factory installed;
- Installation location must be specified.

Code	$	Description
PS	20	*Sold separately*
PSINS	100	*Factory installed*

TCPM

Sliding Drawer

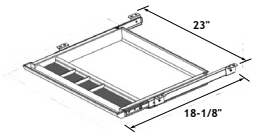

- Black plastic sliding drawer with steel ball bearing slides.

Code	$	Description
TCPM	210	

Miscellaneous Accessories

LK

Lock

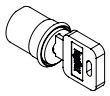

- Locks with keys
- Finish: Satin nickel or black finish;
- Additional locks, sold separately or factory installed;
- Please specify the type of furniture on which the will be installed.

Code	$	Description
LKSN	47	
LKBL	47	
LKSNF	31	
LKBLF	31	
LKSNP	31	
LKBLP	31	
KEY	26	
SERR 010	26	

WBRNS

Wall Bracket for Shelves

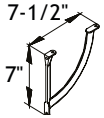

- Satin nickel finsih.

Code	$	Description
WBRNS	111	*Sold in pairs*

ELPF

Black Plastic Grommet

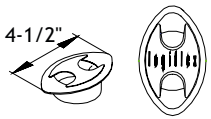

- Standard black plastic grommet with the Logiflex logo engraved;
- 2-1/2" diameter cutout.

Code	$	Description
ELPF	6	*Unit price*

C_PF

Grommet

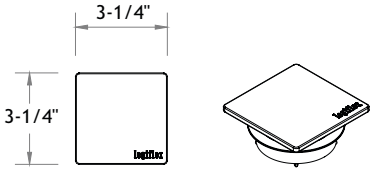

- Square metal grommet with the Logiflex logo engraved;
- Finish: Satin NIckel, Black and Chrome;
- 2-1/2" diameter cutout.

Code	$	Description
CAPF	28	*Unit price - Satin Nickel*
CBPF	28	*Unit price - Black*
CCPF	28	*Unit price - Chrome*
CDPF	28	*Unit price - White*

SWV

Swivel Organizer Tray

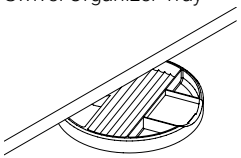

- Storage drawer that rotate 360 degrees;
- Mounts flush to the edge;
- Dimensions: 7-1/2"D x 8-7/8"W x 1"H.

Code	$	Description
SWV	68	

Electrical Accessories

BE-KDHB-1

Single sided power block (1)

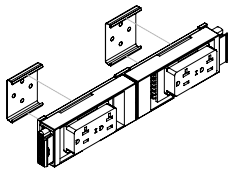

Set including:

- Single sided power block (1);
- 2 Duplex -1 circuit;
- 2 mounting plates;
- Max. 10 duplex per circuit (5 double half power block BE-KDHB-1).

Code	$	Description
BE-KDHB-1-BL	219	
BE-KDHB-1-WH	231	

BE-KDHB-4

Single sided power block (2)

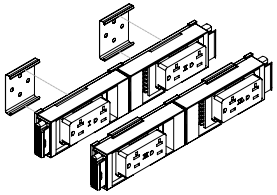

Set including:

- Single sided power block (2);
- 4 Duplex -1 of each circuit;
- 4 Mounting plates;
- Max. 40 duplex (20 double half power block).

Code	$	Description
BE-KDHB-4-BL	450	
BE-KDHB-4-WH	460	

BE-KDBSM-1

Double sided power block

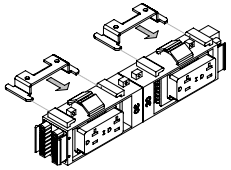

Set including:

- Double sided power block;
- 4 duplex -1 circuit;
- 2 slide mounting brackets;
- Max. 10 duplex per circuit (2 double power block).

Code	$	Description
BE-KDBSM-1-BL	422	
BE-KDBSM-1-WH	441	

BE-KDBSM-4

Double sided power block

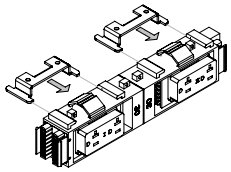

Set including:

- Double sided power block;
- 4 duplex -1 of each circuit;
- 2 slide mounting brackets;
- Max. 40 duplex (10 double power block).

Code	$	Description
BE-KDBSM-4-BL	422	
BE-KDBSM-4-WH	441	

SMWM

Cable Support

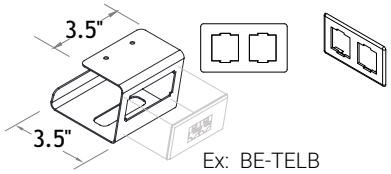

Ex: BE-TELB

- 3.5" metal wire support with 1 telecom plate cutout;
- Satin nickel finish.

Code	$	Description
SMWM	31	

BE-TELA

Telecom plate

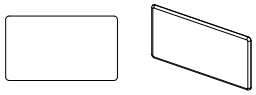

- Blank plate;
- 3-1/8" x 1-3/4";
- Colors: Black, White and Satin nickel;
- To be used with the APB, APF or AP2 cover plate option of the supply walls.

Code	$	Description
BE-TELA-BL	6	
BE-TELA-WH	6	
BE-TELA-SN	6	

BE-TELB

Telecom plate

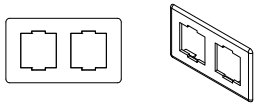

- 2 spaces to install connection ports;
- 3-1/8" x 1-3/4";
- Adapter included.
- Colors: Black, White and Satin nickel.

Code	$	Description
BE-TELB-BL	6	
BE-TELB-WH	6	
BE-TELB-SN	6	

BE-HW

Hardwired conduit power entry

* To be connected to an electrical box by an electrician.

- 8 wires - 4 circuits 20A;
- For 8 trac system;
- Bare wires at one end
- Male end.

Code	$	Description
BE-HW-72	197	*8 wire, 4 circuit - 72"L*
BE-HW-84	214	*8 wire, 4 circuit - 84"L*
BE-HW-96	239	*8 wire, 4 circuit - 96"L*
BE-HW-120	279	*8 wire, 4 circuit - 120"L*
BE-HW-180	409	*8 wire, 4 circuit - 180"L*

Electrical Accessories

BE-PI72

Corded Power entry

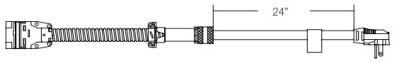

- Corded power entry of 72";
- Right angle 20 Amp plug;
- Male end;
- 1 circuit 20A;
- Must be plug on 20A outlet

Code	$	Description
BE-PI72	244	

BE-NYHW

NYC flex hardwired power infeed

* To be connected to an electrical box by an electrician.
- 8 wires - 4 circuits 20 A;
- Bare wires at one end;
- For 8 trac system;
- Male end.

Code	$	Description
BE-NYHW-72	444	
BE-NYHW-84	467	
BE-NYHW-96	483	
BE-NYHW-108	507	
BE-NYHW-120	526	

BE-J

M/M jumper

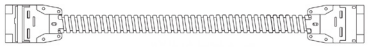

- Non-ajustable;
- 8 wire - 4 circuits;
- M/M;
- For 8 trac system;
- Minimum 12" - Maximum 216".

Code	$	Description
BE-J12	126	*8 wire cable / 4 circuit - 12"L*
BE-J18	134	*8 wire cable / 4 circuit - 18"L*
BE-J24	142	*8 wire cable / 4 circuit - 24"L*
BE-J36	155	*8 wire cable / 4 circuit - 36"L*
BE-J42	165	*8 wire cable / 4 circuit - 42"L*
BE-J48	175	*8 wire cable / 4 circuit - 48"L*
BE-J54	182	*8 wire cable / 4 circuit - 54"L*
BE-J60	198	*8 wire cable / 4 circuit - 60"L*
BE-J66	206	*8 wire cable / 4 circuit - 66"L*
BE-J72	216	*8 wire cable / 4 circuit - 72"L*
BE-J78	229	*8 wire cable / 4 circuit - 78"L*
BE-J84	240	*8 wire cable / 4 circuit - 84"L*
BE-J96	259	*8 wire cable / 4 circuit - 96"L*
BE-J120	302	*8 wire cable / 4 circuit - 120"L*
BE-J216	561	*8 wire cable / 4 circuit - 216"L*

BE-HC

Harness connector F/F

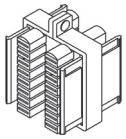

- Used to connect jumper cables and blocks together;
- 1-1/2" x 2-1/4".

Code	$	Description
BE-HC	59	

BE-DHB

Single sided power block

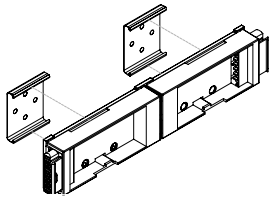

- Maximum of 2 duplex per block;
- Includes mounting plates ;
- F/F ;
- For 8-trac system ;
- Duplex ordered separately.

Code	$	Description
BE-DHB	114	

BE-DBSM

Double sided power block

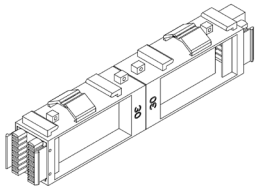

- Maximum of 4 duplex per block;
- For 8-trac system ;
- Slide mounting sold separately ;
- F/F ;
- Duplex ordered separately.

Code	$	Description
BE-DBSM	165	

Electrical Accessories

BE-D20-C

Duplex

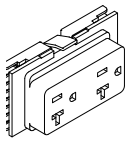

- 20 Amp;
- Height 1-1/18";
- For BE-DHB & BE-DBSM blocks ;
- Colors: Black or white ;
- Maximum of 10 Duplex per circuit.

Code	$	Description
BE-D20-C-1-BL	52	*Circuit 1 - 20A - Black*
BE-D20-C-2-BL	52	*Circuit 2 - 20A - Black*
BE-D20-C-3-BL	52	*Circuit 3 - 20A - Black*
BE-D20-C-4-BL	52	*Isolated Circuit 4 - 20A - Black*
BE-D20-C-1-WH	59	*Circuit 1 - 20A - White*
BE-D20-C-2-WH	59	*Circuit 2 - 20A - White*
BE-D20-C-3-WH	59	*Circuit 3 - 20A - White*
BE-D20-C-4-WH	59	*Isolated Circuit 4 - 20A - White*

CHI

BE-SM58-2

Slide mount bracket

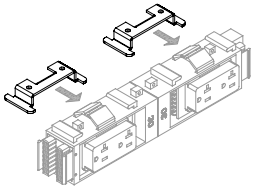

2 brackets;

- Only for the double power block (BE DBSM);
- 5/8" height;
- Screws included.

Code	$	Description
BE-SM58-2	45	

CHI

BE-WMS-32

Power and data cable support single sided (1)

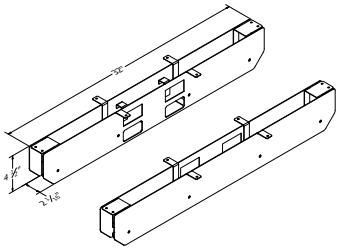

- 32" metal wire management system for power block BE-DHB and 2 telecom plate cutouts
- Channel to isolate power cables from data cables.
- Screws included to install the channel under a top.
- Power block, duplexes and telecom plates not included
- Colors : Black or white.

Code	$	Description
BE-WMS-32-BL	281	*Black*
BE-WMS-32-WH	281	*White*

BE-WMD-32

Power and data cable support double sided (1)

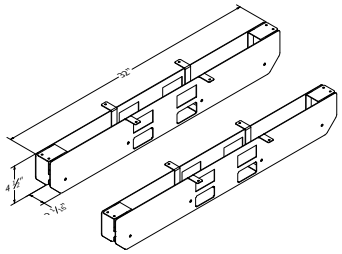

- 32" metal wire management system for power block BE-DBSM and 4 telecom plate cutouts.
- Channel to isolate power cables from data cables.
- Screws included to install the channel under a top.
- Power block, duplexes and telecom plates not included
- Colors : Black or white.

Code	$	Description
BE-WMD-32-BL	281	*Black*
BE-WMD-32-WH	281	*White*

WM

Velcro Tie

- Velcro tie for electrical cable;
- The non-metallic buckle is safe to use around electrical devices;
- Dimensions: ¾" x 10";
- Color: black.

Code	$	Description
WM	14	*Unit price*
WMS	15	*with #8, 9/16" Robertson screw, per unit*

BR1

Branch unit

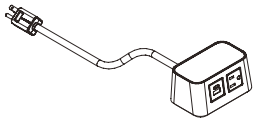

- 1 power outlet / 1 dual charger USB-a+c;
- Table top with braided storm 120 IN power cord.

Code	$	Description
BR1BL	564	*Black*
BR1WH	564	*White*

BR2

Branch unit

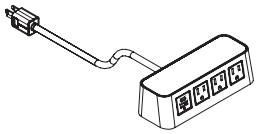

- 3 power outlet / 1 dual charger USB-a+c;
- Table top with braided storm 120 IN power cord.

Code	$	Description
BR2BL	726	*Black*
BR2WH	726	*White*

Electrical Accessories

BE1-DMB

Duplex avec plaque de fixation

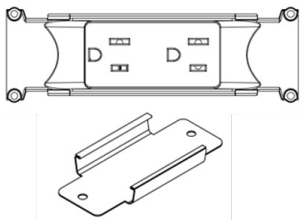

- Duplex - 2 prises 15a;
- Inclus une plaque de fixation et les vis;
- Embout M/M;
- Pour système 1 circuit 15a;
- Maximum de 8 duplex par circuit.

Code	$	Description
BE1-DMB	80	

BE1-DC

Connecteur F/F entre duplex

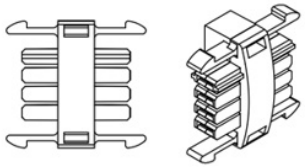

- Permet de connecter des duplex ensemble;
- F/F;
- Pour système 1 circuit 15a.

Code	$	Description
BE1-DC	18	

BE1-PI

Câble d'alimentation Cable fiche 15a

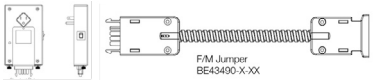

- Câble d'alimentation avec fiche électrique 15a (en 2 sections);
- Embout femelle;
- Pour système 1 circuit 15a;
- Minimum 72" - Maximum 120".

Code	$	Description
BE1-PI72	607	
BE1-PI120	665	

BE1-J

Câble de jonction

- Câble de jonction F/F;
- Non ajustable;
- Pour système 1 circuit 15a;
- Minimum 60" - Maximum 120".

Code	$	Description
BE1-J18	85	Cable - 18"L
BE1-J36	104	Cable - 36"L
BE1-J48	122	Cable - 48"L
BE1-J60	131	Cable - 60"L
BE1-J72	148	Cable - 72"L
BE1-J120	197	Cable - 120"L

BE1-HC

H connecteur M/M

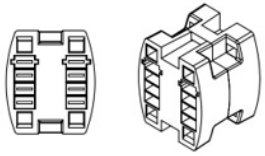

- H connecteur M/M;
- Permet de connecter les câbles de jonction F/F ensemble;
- Pour système 1 circuit 15a.

Code	$	Description
BE1-HC	29	

Electrical Accessories

BCSS1BL

Communication Box

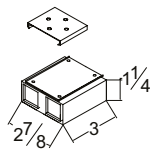

- Communication box to be installed under surface;
- 2 empty telecommunication outlets (outlets not included);
- 15A/125V;
- 1 set of universal adapters.

Code	$	Description
BCSS1BL	186	*Available in black only*

BCSS2BL

Communication Box

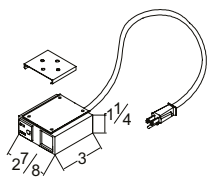

- Communication box to be installed under surface;
- 1 electrical outlet and 1 empty telecommunication outlet (outlet not included);
- 72" power cable with electric plug;
- 15A/125V;
- 1 set of universal adapters.

Code	$	Description
BCSS2BL	186	*Available in black only*

BCSS3BL

Communication Box

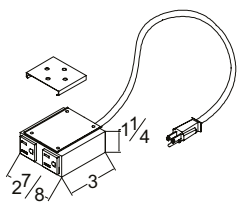

- Communication box to be installed under surface;
- 2 electrical outlets;
- 72" power cable with electric plug;
- 15A/125V;
- 1 set of universal adapters.

Code	$	Description
BCSS3BL	186	*Available in black only*

MH1SN

Power/Data Centre

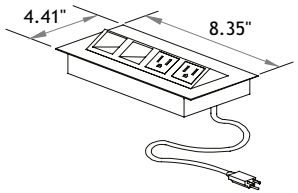

- Power/data centre with retractable door;
- 2 electrical outlets and 2 empty telecommunication outlets (outlets not included);
- 72" power cable with electric plug;
- 15A/125V. 1 set of universal adapters.

Code	$	Description
MH1SN	740	*Satin Nickel, 72" power cable*
MH1SN120	753	*Satin Nickel, 120" power cable*
MH1WH	740	*White, 72" power cable*

MH1B

Power/Data Centre

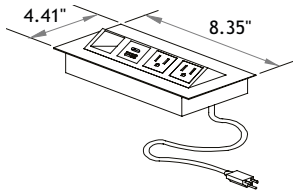

- Power/data centre with retractable door;
- 2 electrical outlets, 1 dual charger USB-a+c and 1 empty telecommunication outlet (outlet not included);
- 72" or 120" power cable with electric plug;
- 1 set of universal adapters.

Code	$	Description
MH1BSN	829	
MH1BSN120	843	

Electrical Accessories

POR 01

RJ45, CAT 6 connectivity port

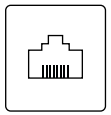

- RJ45, CAT6 connector;
- RJ45 M/F cable - 72” ;
- Finish: Black.

Code	$	Description
POR 01	156	

POR 02

RJ11 connectivity port

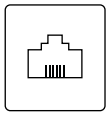

- RJ11 connector, 4 pin
- RJ11 M/F cable - 84”;
- Finish: Black.

Code	$	Description
POR 02	45	

POR 03

USB connectivity port

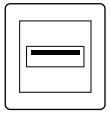

- 1 USB (data/passive);
- USB M/F cable - 72”;
- Finish: Black.

Code	$	Description
POR 03	96	

POR 04

HDMI connectivity port

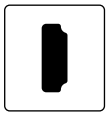

- HDMI connector;
- HDMI M/F cable - 18”;
- Finish: Black.

Code	$	Description
POR 04	142	

POR 05

Mini Stereo Jack

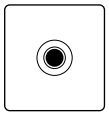

- 3.5 mm Mini Stereo Jack, M/F;
- Audio M/F cable -120”;
- Finish: Black.

Code	$	Description
POR 05	50	

POR 06

VGA Connector

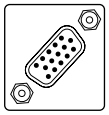

- VGA connector, 15 pin;
- VGA M/F cable -120”;
- Finish: Black.

Code	$	Description
POR 06	180	

Electrical Accessories

PBL

Power bar

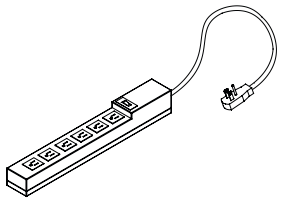

- Power bar with 6 electric outlets;
- 120" power cable with electric plug.

Code	$	Description
PBL	70	

CT

Metal cable tray

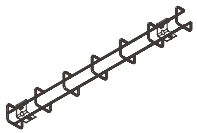

Metal cable tray

- In stainless steel;
- Dimensions: 2x4; Interior dimensions: 1-7/8"D x 1-7/8"H
- Length of 24" and 118" (118" can be cut on site).
- With mounting hardware

Code	$	Description
CT24	121	
CT118	255	

CTCOVER

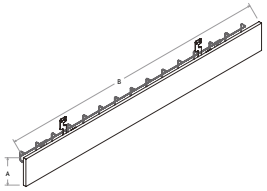

- Laminate cover for cable tray;
- Mounting brackets;
- Dimension "B" is 1/4" recessed.

Code	$	Description
58		*6 x 30*
63		*6 x 36*
69		*6 x 42*
74		*6 x 48*
82		*6 x 54*
88		*6 x 60*
94		*6 x 66*
100		*6 x 72*
107		*6 x 78*
112		*6 x 84*

DSG

Double-sided grommet

Double-sided grommet

- Hole diameter: 2.5"
- Use for electrical cable management with division panels. Drilling to be done by the installer.
- Grommet to cut on site for desired thickness to cover;
- Can not be cut with a simple utility knife, use a sharper and safer tool.

Code	$	Description
DSG BL	31	*Black*
DSG WH	31	*White*

WMP

Wire Management Pole

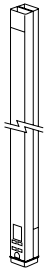

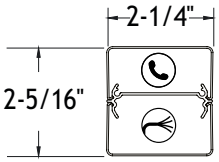

- Blank steel pole to bring cables from the ceiling to a work station;
- Satin nickel finish with a grey boot base;
- 2 compartments: 1 power/1 communications
- Mounting hardware, entrance end plate and ceiling trim plate included;
- Wires and outlets not included;
- Height: 12' 5".

Code	$	Description
WMP	492	

Electrical Accessories

SPINE

Wire Management Spine

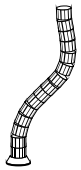

- 2" diameter;
- Gray plastic.

Code	$	Description
SPINE	182	

DEL20

LED task light

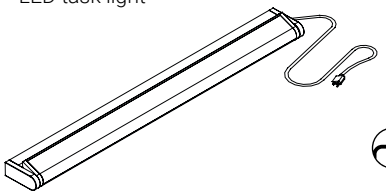

- 20" LED task light, 7.5W, cool white;
- 180° swivel feature;
- 72" power cable with electric plug;
- 20" connection wire for DEL20 task lamps;
- Finish: Satin nickel.

Code	$	Description
DEL20	236	*20" length*

T5

Florescent task light

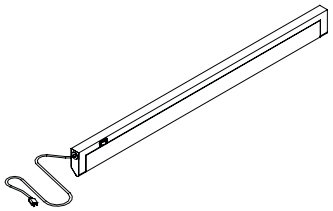

- Florescent lamp (T5) with swivel reflector and electronic ballast;
- 120" power cable with electric plug;
- 16" connection wire for T524, T536 or T548 florescent task lamps;
- Finish: Black and Satin Nickel

Code	$	Description
T524 BL	192	*24" length - Black*
T524SN	192	*24" length - Satin Nickel*
T536 BL	258	*36" length - Black*
T536 SN	258	*36" length - Satin Nickel*
T548 BL	340	*48" length - Black*
T548 SN	340	*48" length - Satin Nickel*

EL1

Retractable Connectivity unit

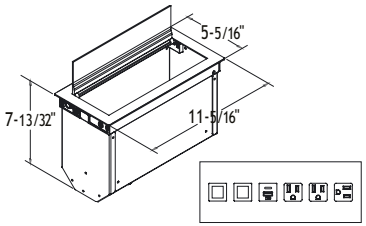

- Retractable connectivity unit with 3 electrical outlets, 1 dual charger USB-a+c and 2 empty telecommunication outlets (outlets not included);
- 72" or 120" power cable with electric plug;
- Finish: Satin Nickel.

Code	$	Description
EL1-72 SN	900	
EL1-120 SN	921	

EL2

Retractable Connectivity unit

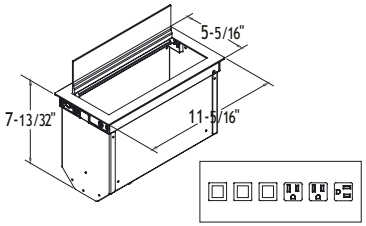

- Retractable connectivity unit with 3 electrical outlets and 3 empty telecommunication outlets (outlets not included);
- 72" or 120" power cable with electric plug;
- Finish: Satin Nickel.

Code	$	Description
EL2-72 SN	734	*Satin Nickel, 72" power cable*
EL2-120 SN	755	*Satin Nickel, 120" power cable*

As our product line is constantly evolving and expanding, we recommend that you visit logiflex.ca for updates.

logiflex
1235 St-Roch N., Sherbrooke QC J1N 0H2 Canada
T : 1.877.864.9323 | F : 1.800.474.7830 | logiflex.ca

CERTIFIED INDOOR AIR QUALITY™ SCS GLOBAL SERVICES
INDOOR ADVANTAGE GOLD FURNITURE