RECEPTION

Price List
USA 2025

logiflex

Table of Contents

Introduction 3

Update Summary 4
Product Map 5
Our social responsability 7
Conditions of Sale 7
Manufacturing Standards 8
How to Use the Price List 10
Appendix A: Colors and Finishes 11
Appendix B: Surfaces and Molding Edges 12
Appendix C: Pedestals and File Drawers 13
Appendix D: Pricing for Additional Adjustable Shelves 13
Appendix E: Wood Grain 14
Appendix F: Monochrom - Manufacturing Standards 15
Appendix G: Calculation/Use of Electrical Components 18

Reception Counters and Desks 21

M-Brace 22
Monochrom 26
Inbox 31
Pedestals for Inbox Collection 36
Reception 3K 39
Gallery 42
Spheric 45
Manhattan 59
Reception C 60

Work Desks 67

Lateral Tables 68
Returns 69
Extended Corner Tables 70

Storage Furniture 72

Installed Pedestals 73
Mobile Pedestals 75
Lateral File Cabinets 77
Multiple Units 78
Cabinets 79
Pigeonhole Units 81

Accessories 84

Handles 85
Lighting 86
Keyboard Trays 87
CPU Holders 88
Miscellaneous Accessories 89
Electrical Accessories 90

Introduction

MAKE A STATEMENT

A client's first impression when they visit your company may affirm their decision to choose your product or service. This makes it important to personalize your reception desk to make it distinctly you. From minimalist geometry to curves and curls, Logiflex's reception units will highlight the individuality of your company, projecting a modern esthetic without sacrificing functionality.

Update Summary

The Reception price list presents these principal modifications:

DATE	SECTION	MODIFICATIONS
May 14, 2025	Accessories	• Modification of LED system.

Previous updates:

DATE	SECTION	MODIFICATIONS
April 30, 2025	Reception Desks	• Monochrom : modification of manufacturing standards and the look of the reception (MON, MONL, MONR).
March 3, 2025	All the Price List	• All prices have been increased by approximately 3%.
March 1, 2024	All the Price List	• All prices have been increased by approximately 5% except products with HPL surface. The Reception REL and RECL series have been increased by 10%.
November 22, 2023	All the Price List	• Removal of high gloss. • Adjustment prices of furniture with glass doors.
	Electrical accessories	• Addition of the wire management system BE-WMS-32 & BE-WMD-32. • Addition of items for 15a electric circuit: BE1-DMB, BE1-DC, BE1-PI, BE1-J & BE1-HC. • Removal of OAS, INT, COV1 & F-714.
July 4, 2023	Electrical accessories	• Chicago Code : Certain electrical components are now marked prohibited or restricted for orders in chicago. (USA pricelist only).
May 22, 2023	Reception Desks	• M-Brace : addition of 1" laminate. • Prices adjustment for Monochrom reception MON, MONL and MONR.

Product Map

Reception Counters

M-Brace p. 22

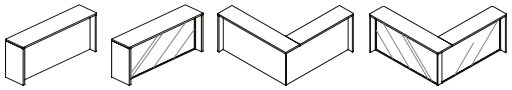

MS-M | MS-A | MC-M | MC-A

Monochrom p. 26

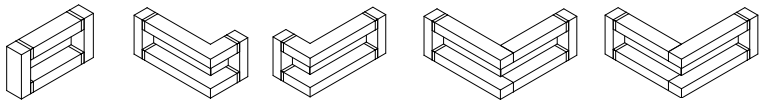

MON | MONL | MONR | MONL | MONR

Reception Desks

Inbox p. 31

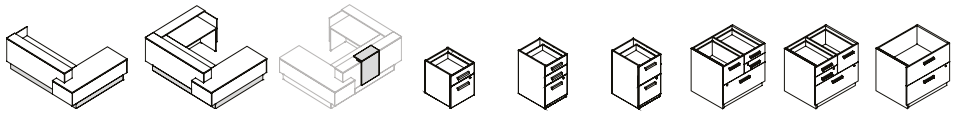

INBL | INBU | INBS | D | E | F | CBCL | BCCL | CL

Reception 3K p. 39

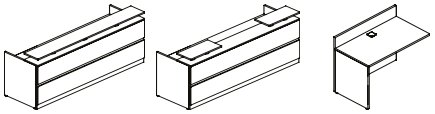

3K1 | 3K2 | RET 3K

Gallery p. 42

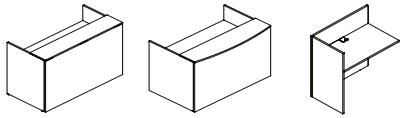

GA | GACX | GAL

Spheric p. 45

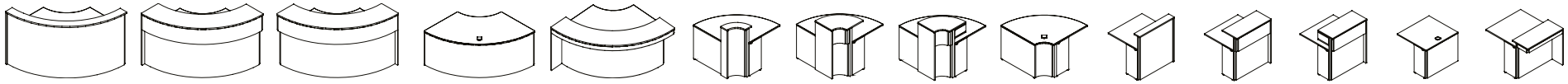

SPH F | SPH T | SPH P | SPH C | SPH A | SPH IF | SPH IT | SPH IP | SPH IC | SPH SF | SPH ST | SPH SP | SPH SC | SPH SA

Manhattan p. 59

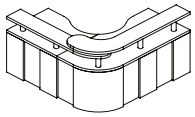

MAN

Reception C p. 60

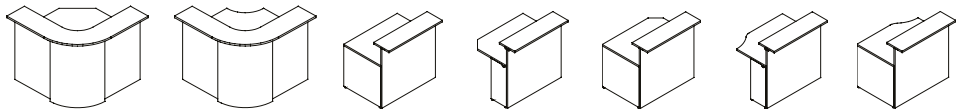

CXT | CXX | CTB | LCTTB | RCTTB | LCVTB | RCVTB

Product Map

Work Desks

Lateral Tables p. 68

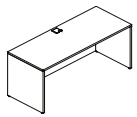

TL

Returns p. 69

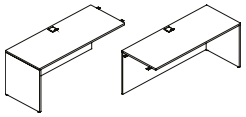

L29 R29

Extended Corner Tables p. 70

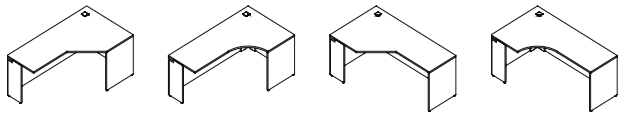

S L A L S R A R

Storage Furniture

Installed Pedestals p. 73

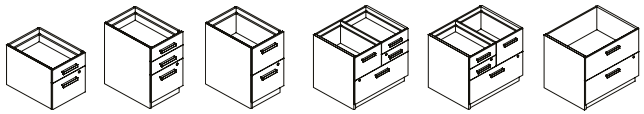

D E F CBCL30 BCCL30 CL30

Storage Furniture *(continued)*

Mobile Pedestals p. 75

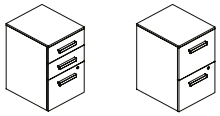

MOBE MOBF

Lateral File Cabinets p. 77

CL2 CL3 CL4

Multiple Units p. 78

UC1 UC2 UC3

Cabinets p. 79

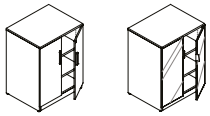

AR AR PV

Pigeonhole Units p. 81

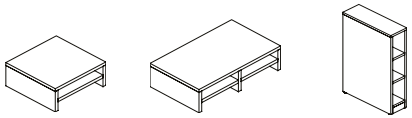

PG PG30 PGV

Our social responsability

At Logiflex, we have chosen to be a responsible North American manufacturer by implementing initiatives for sustainable development. As much as possible, we source local materials and partner with suppliers who prioritize clean manufacturing processes. We also consolidate goods during transport to reduce ou fuel consumption and we continually make changes that help reduce our waste production.

The company is ISO 9001 certified.

You can consult our eco-responsible approach as well as all our certifications in the Certifications section of our website. Find out how our products can help you obtain LEED credits and the Logiflex products that are Indoor Advantage Gold certified.

Conditions of Sale

Prices

The amounts listed in this document are suggested retail prices and may be changed without notice. Applicable taxes are not included. If you have an open and active account with Logiflex, merchandise will be invoiced at the prices prevailing at the time of shipment. A deposit may be requested if the opening of your account has not been completed or if your account has become inactive.

Terms of Payment

Net 30 days F.O.B. Sherbrooke, Quebec. The invoice will be assigned the shipping date and is payable 30 days from that date. Logiflex remains the owner of the merchandise until the invoice is paid in full.

Customized Products (Special Items)

Price requests for customized products or special items can be submitted via the "Member Zone" section of our website, at www.logiflex.ca. Our quotations department will study your request and send you a quotation and a technical drawing for approval as soon as possible. Modifications to quotations or technical drawings can be requested the same way. The approved quotation(s) and technical drawing(s) can then be attached to your purchase order.

Orders

An official purchase order must be issued for all purchases. Your purchase order must contain the following information:

- Your company letterhead
- Your reference number
- The delivery address (with contact name, email and phone number)
- The complete product codes
- Furniture colour(s)
- Quantities
- Descriptions
- Retail prices and net prices
- Project registration number (if applicable), and your approved quotation and technical drawing (for special items).

Please note that a quotation cannot serve as a purchase order.

Returns

All returns must first be approved by Logiflex. If the return is accepted, a Logiflex customer service representative will send you an official return authorization form in order to facilitate procedures between you, the carrier, and the Logiflex merchandise reception clerk. Additional costs for shipping or other expenses may be applied following any merchandise returns.

Modifications and/or Cancellations

You have 48 hours from the time we acknowledge receipt of your order to make any requests for corrections or modifications. You may cancel your order during this same 48-hour period. If you would like to modify or cancel your order after this 48-hour verification period, please check with a Logiflex customer service representative. Orders cannot be changed or cancelled if production has already begun or if Logiflex has already received the raw materials.

Liability

Logiflex's liability ends once the carrier has delivered all items in good condition. A delivery receipt signed by the customer acknowledges that the shipment is complete and has been received in good condition.

Claims

Logiflex recommends inspecting the shipment before signing the carrier's delivery receipt. You must notify Logiflex of any incomplete shipments or damaged furniture within 30 days after delivery. Requests to replace damaged products can be made via the "Member Zone" section of our website, at www.logiflex.ca. Our after-sales service department will examine your request and help you correct the situation.

Changes

Logiflex reserves the right to make changes to the materials, accessories, components, specifications and designs, and to discontinue collections and/or models, at any time and without prior notice.

Storage and/or Shipping Fees

According to the terms Logiflex set forth in the transport policy. The transport policy can be consulted online in the Private Space.

Items Delivered Disassembled

Some items are delivered disassembled, such as empty desks, empty returns, bridges, arched tables, D, P or Q tables, lateral tables, end tables, hook tables, corner tables and extended-corner tables.

Warranty

Logiflex guarantees to the original purchaser that Logiflex products are free from defects in design, materials and workmanship for the product's lifetime, with certain exceptions.

You may consult the full warranty on the website: **Logiflex Warranty**

Manufacturing Standards

Product Dimensions

For display purposes, the furniture dimensions represented in the price tables on each product page are rounded to the nearest whole number.

Tops, Bases, Fronts and Shelves

Each collection offers different thicknesses for tops, faces, fronts and shelves. Please consult the illustrations below.

M-Brace

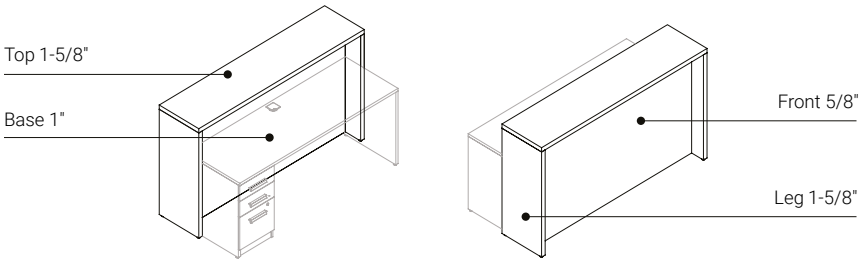

Inbox

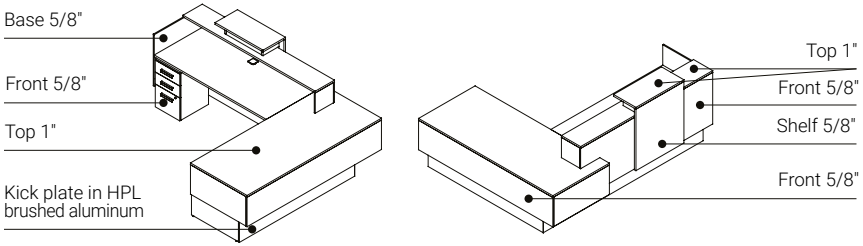

Manhattan

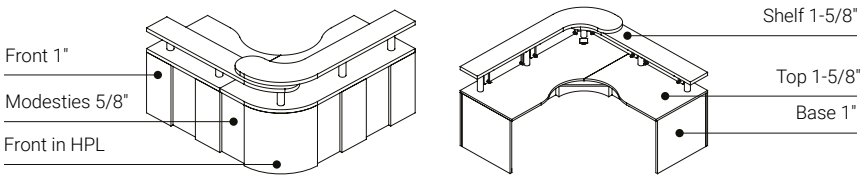

Spheric

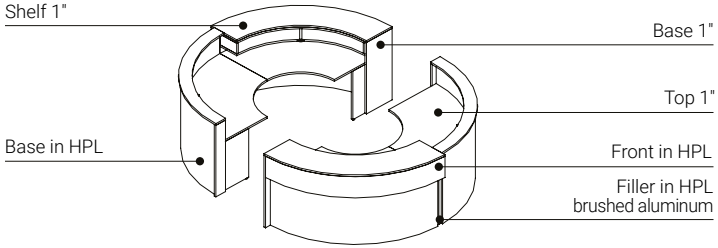

Reception 3K

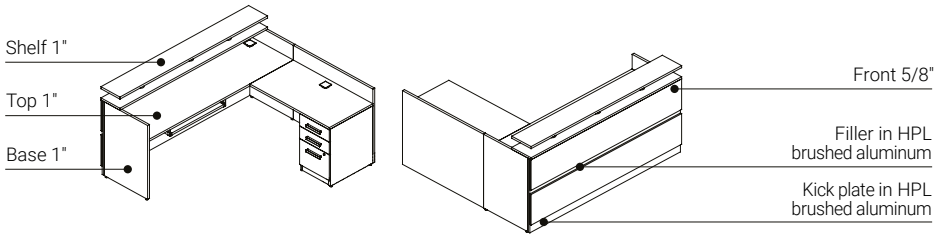

Reception C

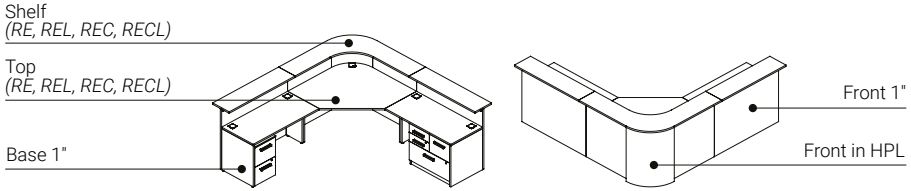

Gallery

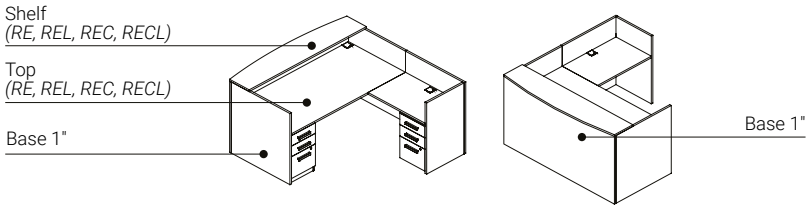

Manufacturing Standards (continued)

Handles

Handles are included with all storage furniture. Refer to each collection's pages for the standard handle used. Glass doors include built-in handles into the aluminum frame. Please refer to the Logiflex accessories selection at the end of this price list on p. 85.

Grommets

Grommets are included on all work desks, refer to each collection's pages for the standard grommet finish used.

Locks

Locks are included with all storage furniture, except for those with aluminum doors. The standard is LKSN, satin nickel finish. Please refer to the Logiflex accessories selection at the end of this price list on p. 89.

Pedestals

All drawers are made of black Medium density fiberboard (MDF) with an average thickness of 7/16".

Drawer Fronts

A PVC strip 1.5 mm thick is systematically applied along all drawer front edges.

Finishes

You must specify the desired finish(es) for each item of furniture ordered. Please make your selection(s) from the Logiflex **Colors & Finishes Guide**.

Levelers

All furniture items sit on 1" in diameter, white nylon levelers, allowing for up to 1" height adjustment.

Colors

Colors have to be specified for all furniture items ordered. Consult the "How to Oder" section on the product page for further details about the procedure. Consult the Logiflex **Colors & Finishes Guide** for the colors and finishes offered. Unless indicated otherwise in the order, the PVC edge will match the color and finish specified.

How to Use the Price List

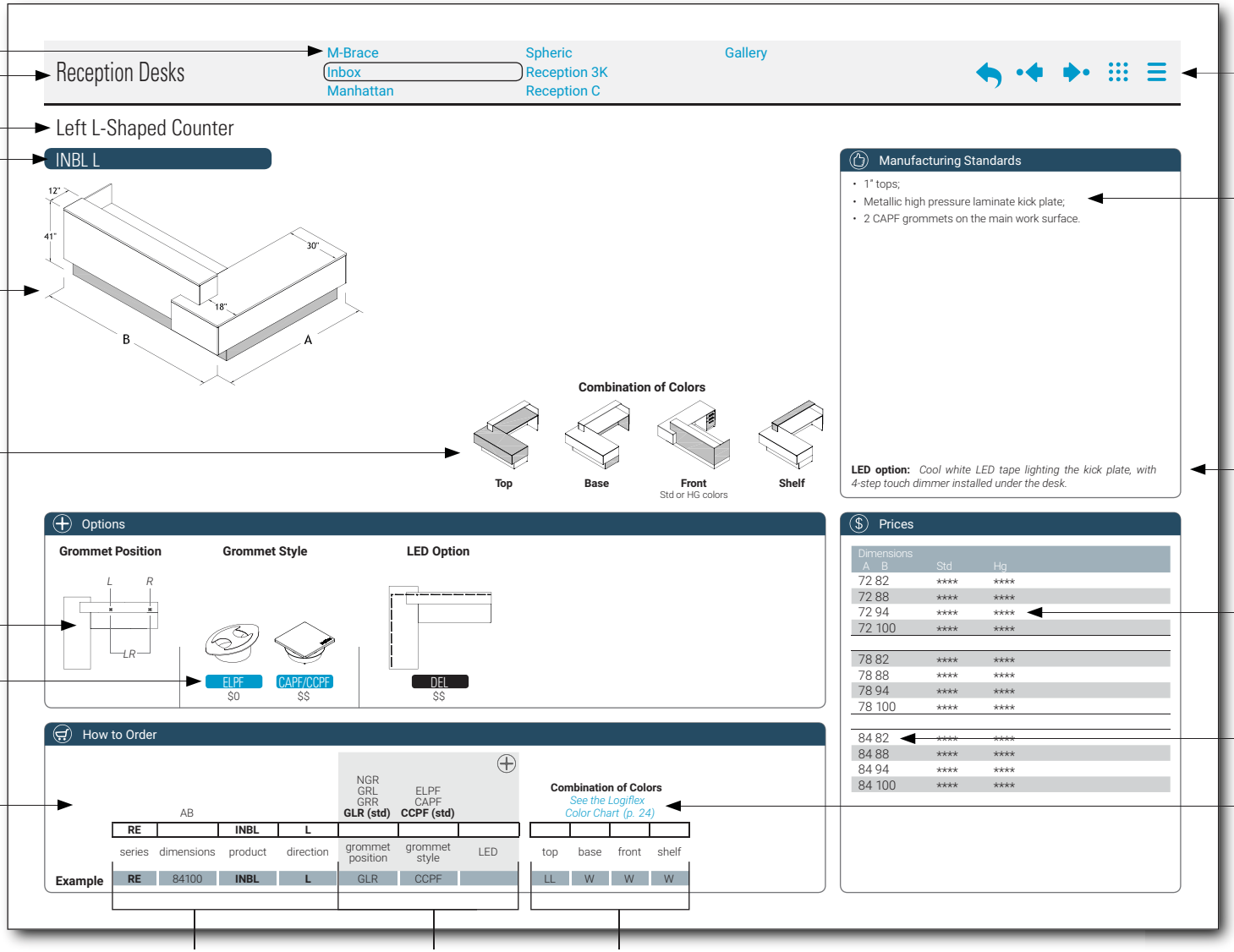

Appendix A: Colors and Finishes

How to specify your laminate colors

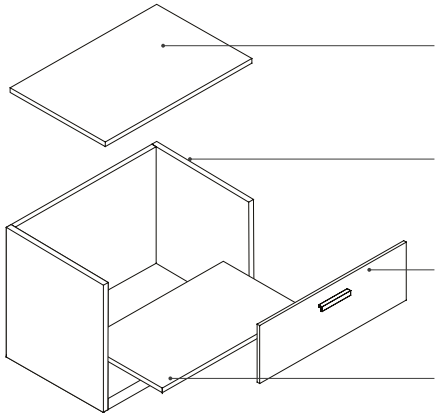

Top
Surface / Edge
W / W

Base
Surface / Edge
W / W

Front
Surface / Edge
GGH / GGH

Shelf
Surface / Edge
W / W

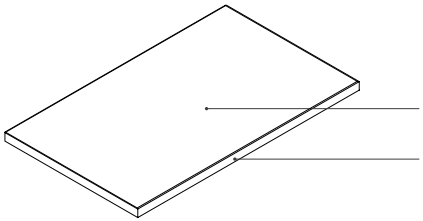

Surface

Edge

Glass and Acrylic

V4	White Glass
V5	White Satin
KB	Jet Black Glass
KS	Black Satin Glass
KE	Ocean Blue Glass
KO	Overseas Blue Glass
KR	Bright Red Glass
KM	Metallic Gray Glass
KA	Satin Silver Glass
KG	Satin Gold Glass
VS	Frosted Glass
PL	Frosted Acrylic

Availablility Chart

FINI FINISH	CODE	COLOR COULEUR	THICKNESS ÉPAISSEUR ⅝"	1"	1-⅝"	HPL STRATIFIÉ	PANVAL CODE
OMNIA	DOO	Dosha	•	•		•	K77
	COO	Cosmos	•	•		•	K78
AURA	GIA	Ginger Root | Gingembre	•	•		•	H72
	HAA	Haze | Brume	•	•	•	•	H57
	OHA	Ohm	•	•	•	•	K69
	STA	Storm | Tempête	•	•	•	•	H58
	TUA	Tundra	•	•		•	H75
LYRA	ASY	Asha	•	•		•	K47
	CIY	Chiffon | Mousseline **	•	•	•	•	K60
	KAY	Kali	•	•		•	K46
SUPERMAT	IGS	Ingot grey | Gris lingot	•	•			828
	WGS	Willow grey | Gris saule	•	•			802
DOLOMITE	AU	Audacity | Audace **	•	•	•	•	241
	B	Jet Black | Noir intense *	•	•		•	888 | S405-CA
	BC	Brown cherry | Cerisier brun	•	•	•	•	207
	C	Slate | Ardoise *	•	•		•	801
	DR	Driftwood | Bois de rive	•	•		•	744
	G	Mink Grey | Gris vison	•	•		•	805 | OU-927
	NM	Natural Maple | Érable naturel	•	•	•	•	206
	PO	Porto	•	•		•	913 | OU-648
	SW	Smoked Walnut | Noyer fumé	•	•	•	•	G21
	TO	Tobacco	•	•		•	205
	W	Polar White | Blanc polaire	•	•	•	•	555 | 459-CA
	WK	Whisky	•	•	•	•	245

* Non recommended color for work surfaces.
** For conference tables with 2 or more parts, we do not recommend the use of colors with irregular and contrasted woodgrain like Chiffon, Audacity or Coastal Pear as it results in a pronounced wood grain mismatch.

Colors may vary from 2% to 5% between tfl and hpl laminates due to different technical applications.

See our complete **Colors & Finishes Guide**

N New

Appendix B: Surfaces and Molding Edges

SERIES	PREVIEW	COMPONENT	MATERIAL	EDGES / MOLDING
RE	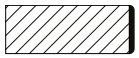	**1" surfaces**	Thermofused laminate (TFL) - 1" high-density particle board.	1.5 mm polyvinyl chloride (PVC)
REL		**1-1/16" surfaces**	High pressure laminate (HPL) - 1" high-density particle board, 1/32" HPL sheet on surface, 1/32" balancing sheet under surface (prevents bending).	1.5 mm polyvinyl chloride (PVC)
REC	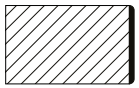	**1-5/8" surfaces**	Thermofused laminate (TFL) - 1-5/8" high-density particle board.	1.5 mm polyvinyl chloride (PVC)
RECL	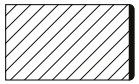	**1-9/16" surface**	High pressure laminate (HPL) - 1-1/2" high-density particle board, 1/32" HPL sheet on surface, 1/32" balancing sheet under surface (prevents bending).	1.5 mm polyvinyl chloride (PVC)

Appendix C: Pedestals and File Drawers

D, E and F Pedestals

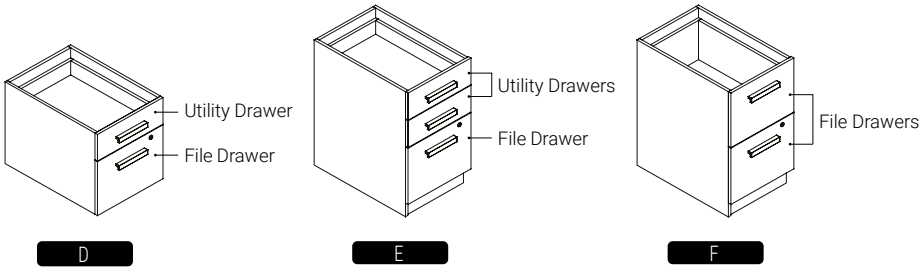

Combination Pedestals

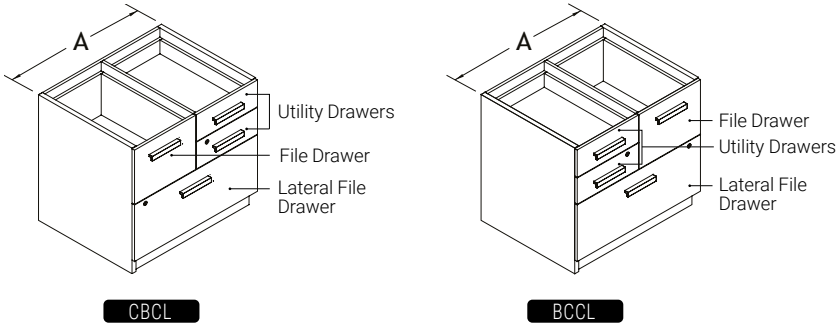

File Drawers

File drawers can receive either legal or letter formats. Please refer to the illustration below.

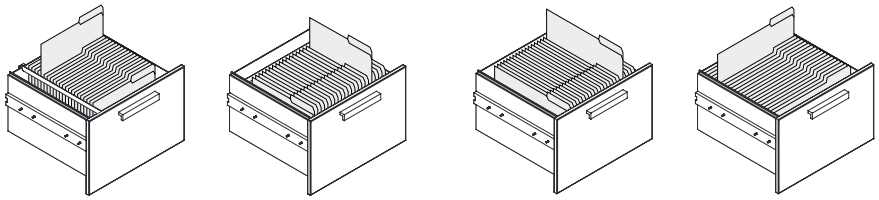

Legal format

Letter format

Lateral File Drawers

Lateral file drawers can receive either legal or letter formats. Please refer to the illustration below.

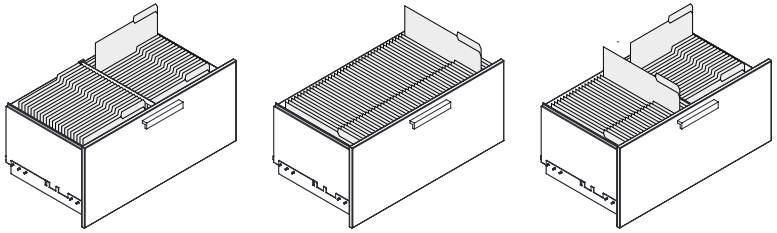

Legal and Letter formats

*For solidity purposes, ensure all files are suspended.

Appendix D: Pricing for Additional Adjustable Shelves

To find out the price for additional adjustale shelves, trace down the vertical column "A" the shelf depth to its intersection with columns "B" the shelf length.

$		B								
		12"	15"	18"	20"	24"	30"	36"	42"	48"
A	12"	24	28	37	39	45	56	68	78	90
	15"	28	38	43	46	56	70	84	98	113
	16"	29	39	45	48	61	76	90	105	121
	20"	39	46	56	63	76	93	113	132	148
	24"	45	56	68	76	90	113	135	156	180
	30"	56	70	84	93	113	139			

Appendix E: Wood Grain

Each collection offers different wood grain direction. Please consult the illustrations below.

M-Brace

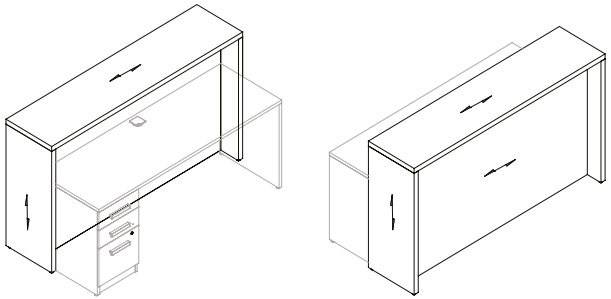

Inbox

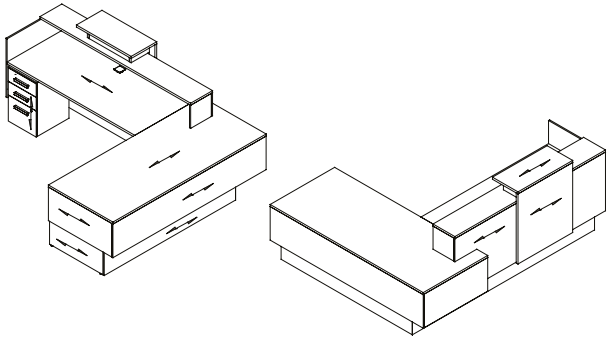

Manhattan

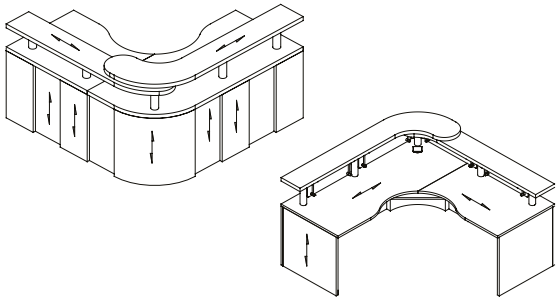

Sphéric

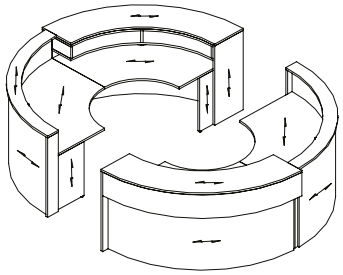

Reception 3K

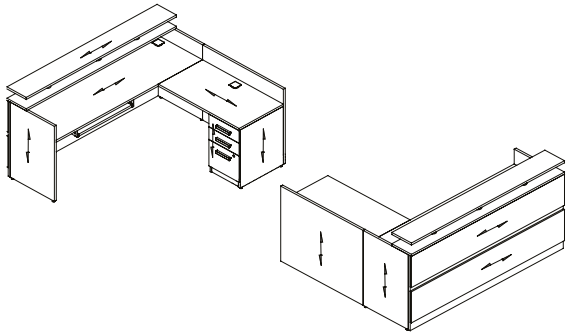

Reception C

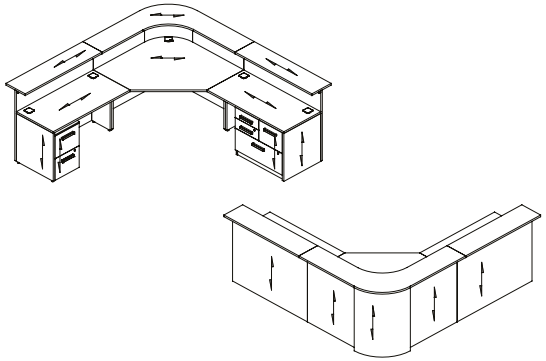

Gallery

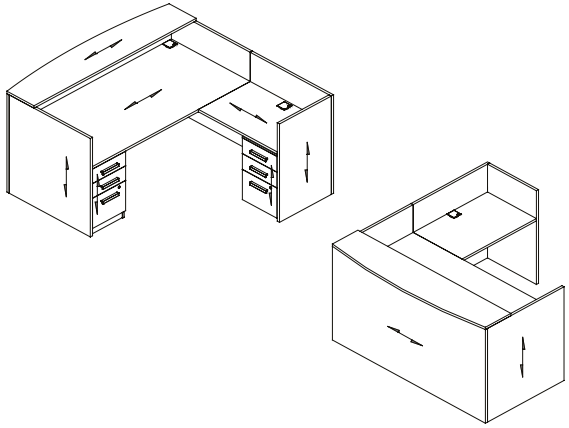

Appendix F: Monochrom - Manufacturing Standards

Monochrom Reception Counter Components

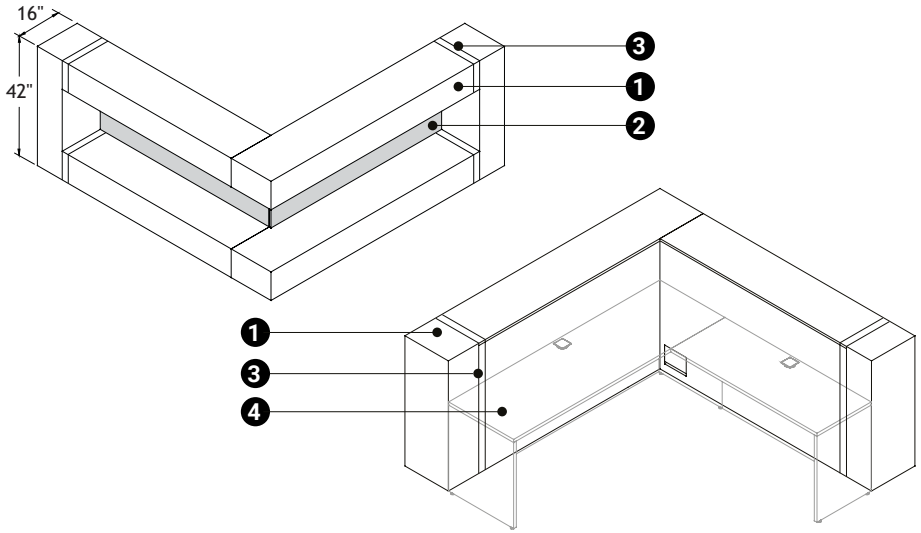

❶ **Frame** with Monochrom high pressure laminate applied after assembly for a clean and precise look without visible edges. 5/8" panel construction, on white levelers.

❷ **Front** high pressure laminate recessed 14-1/4".

❸ **Wood inserts**.

❹ **Work desk and storage furniture sold separately and are independent**. The Monochrom reception desks can be combined with all Logiflex collections.

Information about Monochrom HPL

The Monochrom finish offers an ultra matte surface, low light reflectivity, anti-fingerprint finish and a soft-touch surface. This product can be easily cleaned and requires no special maintenance plan. In addition, the Monochrom finish is antibacterial and resists wear, abrasion, acids, bases and solvents.

Properties of the Monochrom finish :

- Matte finish, ultra-soft to the touch;
- Anti-fingerprints;
- Through-color core;
- Scratch resistant;
- Antibacterial.

For more information on the Monochrom finish, refer to the Material Data Sheet.

Application of Colors

We recommend you rely on actual samples to make your color combinations.

Frame
The Monochrom reception frame is covered only with Monochrom high pressure laminate, available in two colors:

CBM Carbon

CKM Chalk

Recessed Front
All colors available in HPL can be used for the recessed front.
The direction of the wood grain is horizontal. **See Appendix A.**

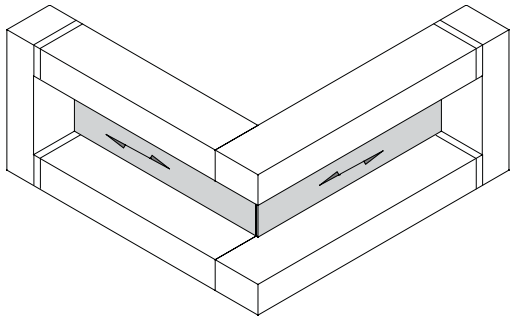

Wood Inserts
All available wood stain colors can be used for wood inserts.
See our complete **Colors & Finishes Guide**

Piazza Cement : exclusive to the Monochrom collection
The recessed front can also be finished in Piazza Cement (PIC), a new laminate color offered exclusively for the recessed front of the Monochrom reception.

PIC Piazza Cement

Appendix F: Monochrom - Manufacturing Standards

Configurations

Multiple configurations are possible by combining one of three Monochrom reception counter models with different desks, returns and cabinets. It is important to consider the following in selecting the desk to combine with the reception counter.

MON - Linear Reception Counter:

This counter has been designed to achieve a linear configuration. Both sides of the work desk are visible.

- The width of the desk is the same as the width of the reception desk.
- There are no restrictions on the depth of the desk.

***Note:** For stability purposes it is recommended that this reception counter be attached to a desk.*

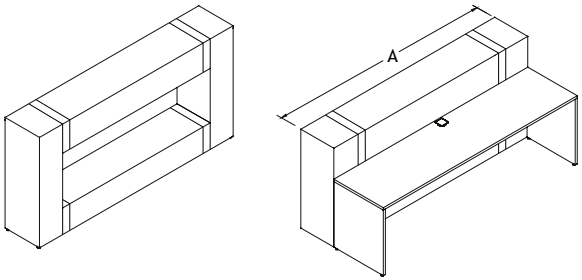

MONL/MONR (40" and 46" deep) - "L" Shaped Reception Counter

This counter has been designed to achieve an overall linear configuration. The return of the counter can hide one of the sides of the desk.

- The width of the desk must be 16" less than the width of the counter (Dim. A).
- The depth of the desk must be 16" less than the counter depth (Dim. B)

Ordering Information

Desk *(width)*

Counter Width (**A**)	Desk Width
76"	60"
82"	66"
88"	72"
94"	78"

Desk *(depth)*

Counter Depth (**B**)	Desk Depth
40"	24"
46"	30"

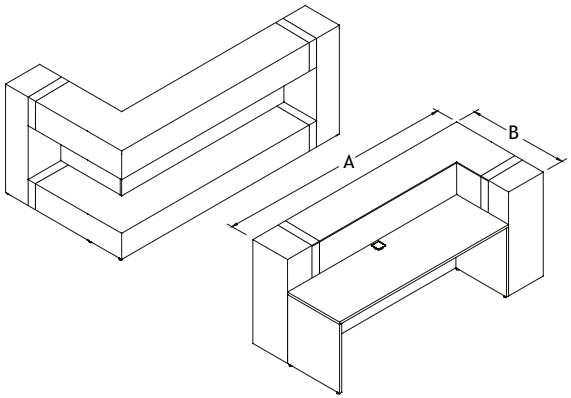

MONL/MONR (70"deep and more) - "L" Shaped Reception Counter

This counter has been designed to achieve an L-shaped configuration. The return of the counter can hide one side of the desk and return.

- The width of the desk must be 16" less than the width of the counter (Dim. A).
- The width of the return will depend on the depth of the desk.
  - If the desk is 24" deep, the return must be 40" less than the counter depth (Dim. B)
  - If the desk is 30" deep, the return must be 46" less than the counter depth (Dim. B)

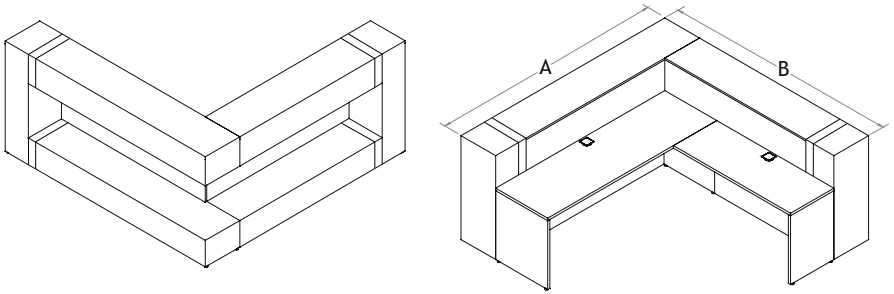

Ordering Information

Desk

Counter width (**A**)	Desk width
76"	60"
82"	66"
88"	72"
94"	78"

Return

24" deep desk		**30" deep desk**	
Return depth (**B**)	Return width	Return depth (**B**)	Return width
70"	30"	70"	-
76"	36"	76"	30"
82"	42"	82"	36"
88"	48"	88"	42"
94"	54"	94"	48"

Appendix F: Monochrom - Manufacturing Standards

So Many Other Possible Configurations

As the reception counter is independent to the desk, you can create different types of configurations. It is therefore important to consider the measurements mentioned on the previous page. Here are only a few ideas of the possibilities... let your imagination go!

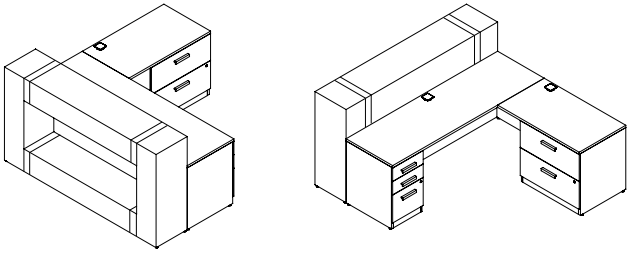

Example 1:
MON linear reception counter, Manhattan desk with E pedestal, right return with 2 lateral filing drawers.

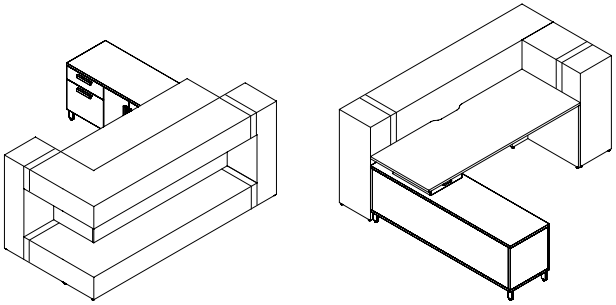

Example 2:
MONR "L" shaped reception counter, Level layering desk FM with drawer suppport and wire cutout, UN02SL high pedestal.

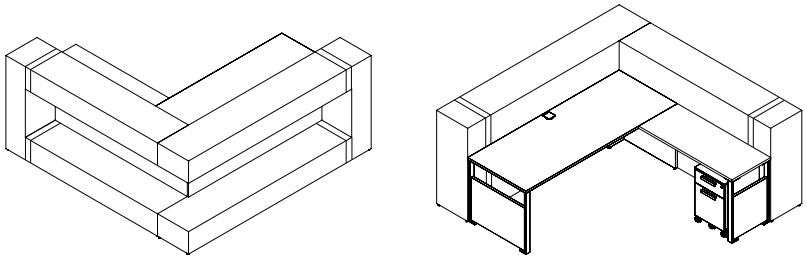

Example 3:
MONR "L" shaped reception counter, Level YM desk, RY return, MOBD mobile pedestal.

LED Option (D1)

The LED option* consists of a multicolor LED strip installed under the counter surface, which illuminates the recessed front. A remote control ❶ is located under the countertop (see image below).

If the LED option has been ordered, the cabinet comes with LED strips ready to be installed under the countertop. Simply remove the plastic film and place the LED strip after assembly.

***Note:** It is recommended to order the LED option at the same time as the reception unit. However, it can be ordered later, but please note that a large part of the unit will need to be disassembled in order to run the components through the furniture.

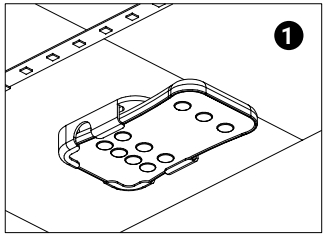

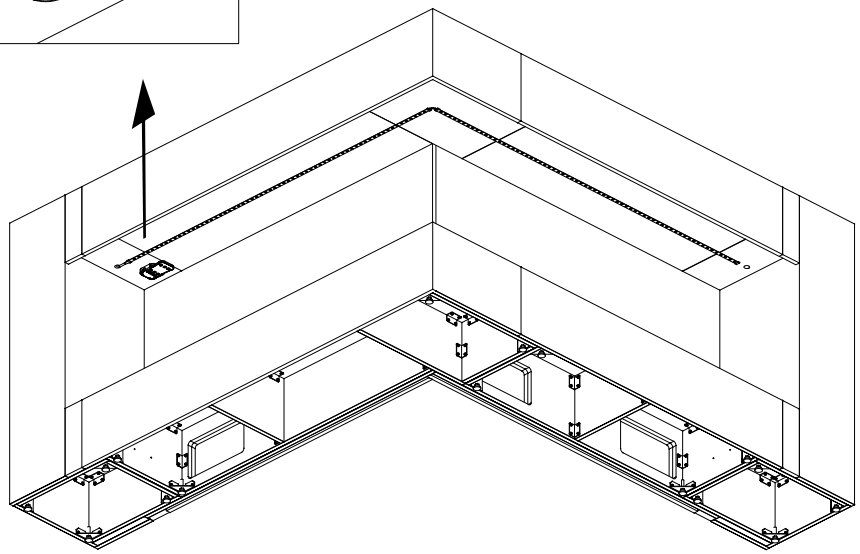

Appendix G: Calculation/Use of Electrical Components

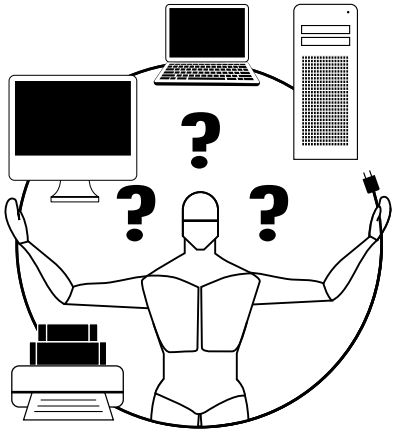

An Introduction to Calculation and Use of Electrical Components

Most people are uncomfortable with anything related to electricity. This step-by-step guide is intended for people who are not familiar with electrical installations but who have to specify what system they need when ordering furniture. In this guide, you will learn how to choose and specify the electrical components required for your projects. The list that follows illustrates and identifies each product and describes its applications.

The electrical components are all recognized by the Underwriters Laboratory (UL) as office furniture accessories and are manufactured according to Canadian Standards Association (CSA) and UL electrical standards.

Note: All electrical connections must be performed by a certified electrician.

By following these 3 simple steps, you can easily determine the number of circuits required to ensure safe use of your electrical system.

1. Determing the Number of Amperes Required
2. Calculating the Total Amperes
3. Determing How Many Circuits You Need

STEP 1:
Determing the Number of Amperes Required

What is Amperage
An Ampere (Amp or A) is a unit for measuring the rate at which electric current flows. All electrical equipment has an amperage rate. By following these few simple steps, you can easily determine the number of circuits required to ensure safe use of your electrical equipment.

Determine the Number of Amperes Required
On your computer or other electric devices (ie: monitor, central processing unit, printer) find the plate that provides the technical specifications as follows:

Input: 120V - 1.8A.

If you cannot locate this information on the machine, you will probably find it in the user manual.

Here are a few examples of how many Amps some equipment may consume. Please note that these are examples and the number of amperes may vary from one machine to another.

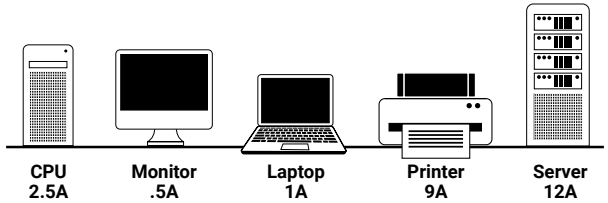

Electrical System Capacity

Our electrical system is designed for circuits of 20 amps each. This includes electrical components such as computers, printers, laptops, monitors, server or other devices.

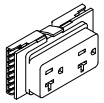

20A

A single Duplex has a maximum capacity of 20 A

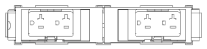

Each power block can hold 2 Duplex

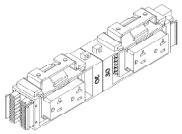

Each power block can hold 4 Duplex

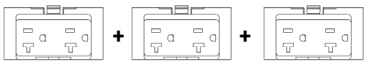

If the duplexes are connected to the same circuit, the capacity is divided between them. For example, 3 duplexes connected to the same circuit have a total capacity of 20A.

Appendix G: Calculation/Use of Electrical Components

STEP 2:
Calculating the Total Amperes

Add the Amperes

Add the number of amps for each machine. In our example, there are 4 CPUs at 2.5A per computer, 4 monitors at 0.5A and one printer at 9A.

2.5A + .5A + 2.5A + .5A + 2.5A + .5A + 2.5A + .5A + 9A = **21A**

The total number of amperes used in this example equals to 21A.

Divide by 16

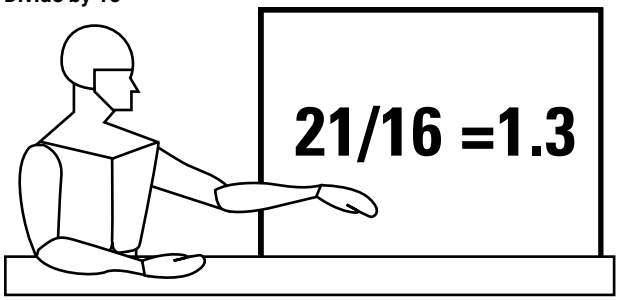

Most machines and computers used in offices or schools are used continuously for many hours at a time. In this type of situation, national electrical codes usually limit circuits at 80% of their capacity of continuous use. Our electrical system is designed for circuits of 20 amps each. So 80% of 20A is 16 Amps You must therefore divide the total number of amperes calculated by 16.

STEP 3:
Determing How Many Circuits You Need

In most cases, this number will contain decimals. Round up to the next whole number, and this will be the number of circuits required for your equipment to run safely. If the number obtained is higher than 4 (the maximum number of circuits for a system), you must reduce the total amperage or add another electrical system. Continuing with our example, the 1.3A is rounded up to 2A.

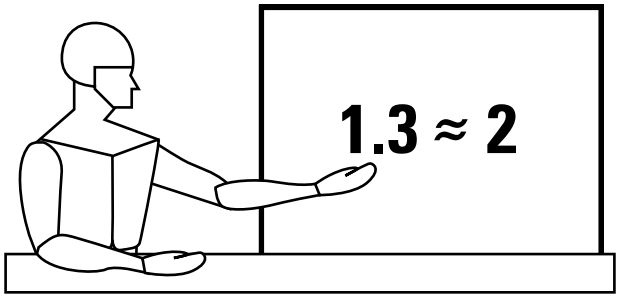

Here is one possible configuration. Using 5 power blocks joined together with junction cables, only 2 circuits are being used. The 4 workstations would be on the first circuit for a total of 16 amps. The printer would be on the second circuit.

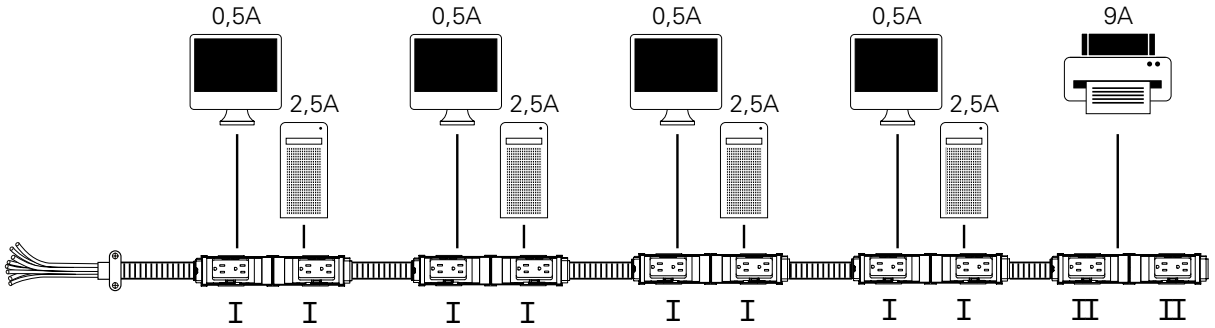

CHICAGO CODE

There is a specific norm about Chicago electrical components. Some of our products are approved, but not all of them.

If you see this logo in Accessories, this means the product is **NOT** approved in Chicago. More info here.

Appendix G: Calculation/Use of Electrical Components

8 Wire, 4 Circuit (3+1) Power Block

- Duplex are interchangable permitting any required circuit combination;
- Blocks for single or double sided applications;
- Complies with National Electric Code;
- UL Listed/Recognized.

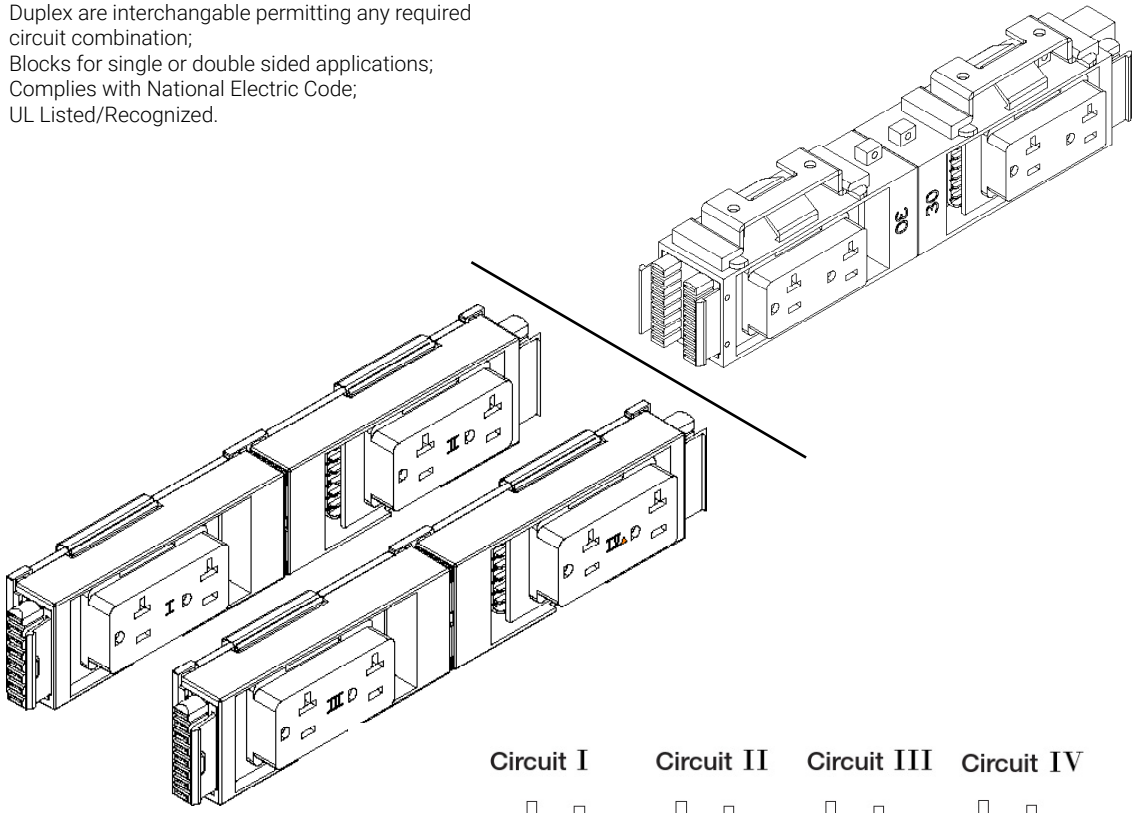

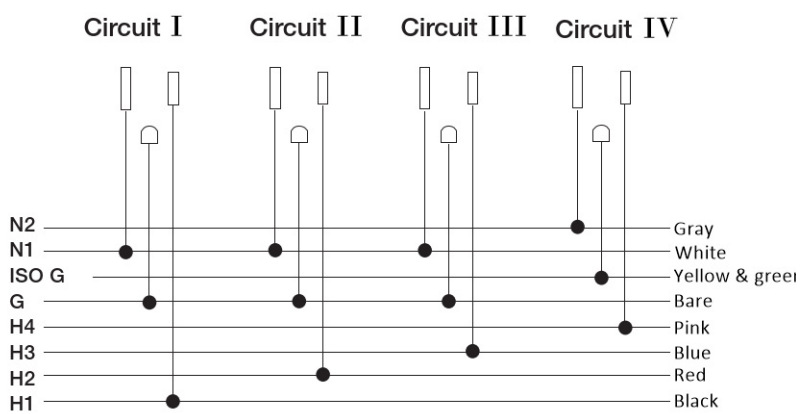

Starter Cable with Hardwire

- 4 circuit starter cable with hardwire at one end;
- 4 circuits rated for 20 AMP each;
- Available in lengths from 12"to 180";
- Whip end to be connected to building power by an electrican.

Starter Cable with Plug

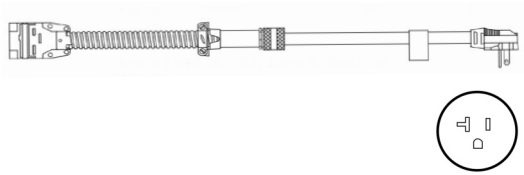

- 1 circuit starter cable with 20A electrical plug;
- Circuit rated for 20 AMP;
- Available in lengths from 36"to 180".

Junction Cable

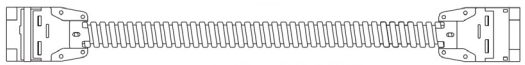

- 4 circuit cord;
- All circuits rated for 20 AMP;
- Available in lengths from 12"to 216".

Reception Counters and Desks

M-Brace - Straight Reception Counter with Laminate Front

MS-M

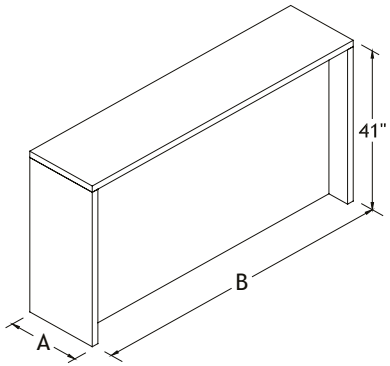

Manufacturing Standards

- RE : 1" top and legs.
  REC : 1-5/8" top and legs.
- 5-3/8" recessed laminate front (exterior);
- 6" recessed modesty panel (interior).

For specification reasons:
- The reception desk RE is 1-5/8" less than the dimension listed.
- The reception desk REC is 3/8" less than the dimension listed.

Interior width for work desk:
- 60" work desk fits with a 64" reception counter;
- 72" work desk fits with a 76" reception counter;
- 78" work desk fits with a 82" reception counter.

Prices

Dimensions A B C	RE	REC
18 64 41	1470	1470
18 76 41	1588	1588
18 82 41	1640	1640

Combination of Colors

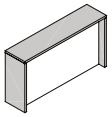

Top & Legs
Color available for the REC serie in 1-5/8" only

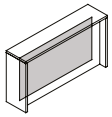

Base
1" structure and panel on user side

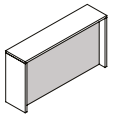

Front
Choice of 5/8" color

How to Order

	RE REC	ABC		Combination of Colors *See the Logiflex Color Chart (p. 11)*		
			MS-M			
	series	dimensions	product	top & legs	base	front
Example	**REC**	188241	**MS-M**	SW	W	W-H

M-Brace - Straight Reception Counter with Acrylic Front Panel

MS-A

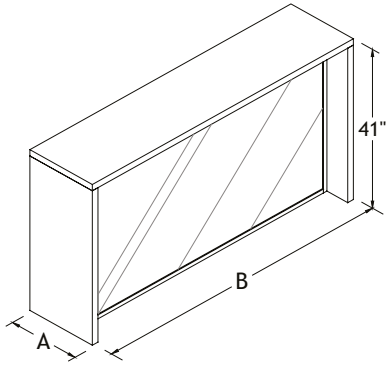

Manufacturing Standards

- RE : 1" top and legs.
  REC : 1-5/8" top and legs.
- 6" recessed translucent white acrylic front with laminate frame (interior and exterior);
- Removable front for access to the lighting.

For specification reasons:
- The reception desk RE is 1-5/8" less than the dimension listed.
- The reception desk REC is 3/8" less than the dimension listed.

Interior width for work desk:
- 60" work desk fits with a 64" reception counter;
- 72" work desk fits with a 76" reception counter;
- 78" work desk fits with a 82" reception counter.

LED option: *Neutral white LED backlighting with a dimmer switch installed on the back of the counter, user side.*

Prices

Dimensions A B C	RE (D0)	RE (D1)	RE (D2)	REC (D0)	REC (D1)	REC (D2)
18 64 41	2660	2864	3071	2660	2864	3071
18 76 41	2790	2997	3201	2790	2997	3201
18 82 41	2826	3032	3267	2826	3032	3267

LED Lighting

D0
No LED

D1
LED on top only

D2
LED on top and bottom

Combination of Colors

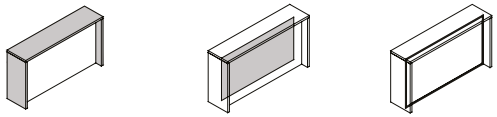

Top & Legs
Color available for the REC serie in 1-5/8" only

Base
1" panel on user side

Front
1" laminate frame around acrylic panel

How to Order

	series	dimensions	product	LED	top & legs	base	front
	RE REC	ABC	**MS-A**	D0 D1 D2	**Combination of Colors** *See the Logiflex Color Chart (p. 11)*		
Example	**REC**	188241	**MS-A**	D2	SW	W	SW

M-Brace - Corner Reception Counter with Laminate Front Panel

MC-M L

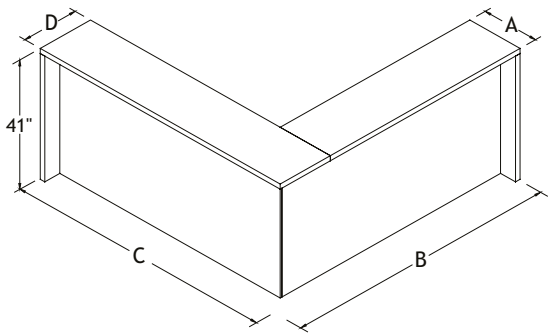

MC-M R

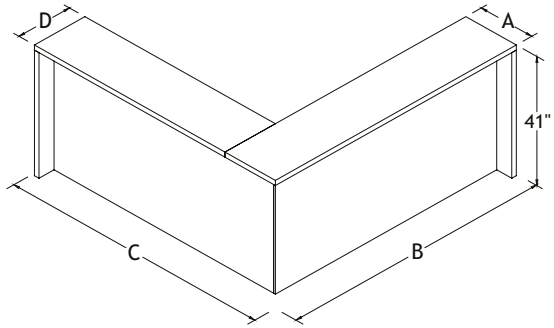

Manufacturing Standards

- RE : 1" top and legs.
  REC : 1-5/8" top and legs.
- 5-3/8" recessed laminate front (exterior);
- 6" recessed modesty panel (interior).

For specification reasons:
- The reception desk RE is 3/4" less than the dimension listed.
- The reception desk REC is 1/8" less than the dimension listed.

Interior width for work desk:
- 60"x 60" work desk fits with a 74"x 74" reception counter;
- 66"x 66" work desk fits with a 80"x 80" reception counter;
- 72"x 72" work desk fits with a 86"x 86" reception counter.

Prices

Dimensions A	B	C	D	RE	REC
18	74	74	18	2772	2772
18	80	80	18	2861	2861
18	86	86	18	2953	2953

Combination of Colors

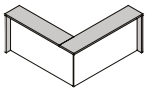

Top & Legs
Color available for the REC serie in 1-5/8" only

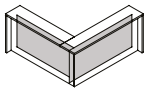

Base
1" structure and panel on user side

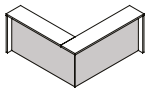

Front
Choice of 5/8" color

How to Order

	series	dimensions	height	product	direction	top & legs	base	front
	RE REC	ABCD	41	MC-M	L R	Combination of Colors *See the Logiflex Color Chart (p. 11)*		
Example	**REC**	18868618	**41**	**MC-M**	R	SW	SW	W-H

M-Brace - Corner Reception Counter with Acrylic Front Panel

MC-A L

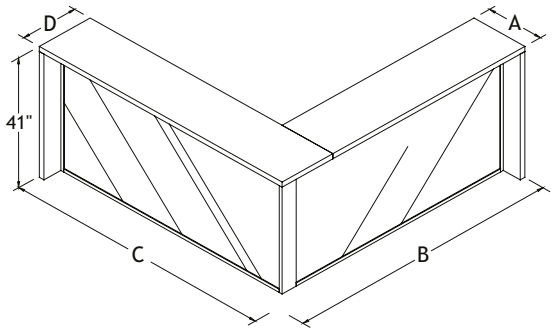

MC-A R

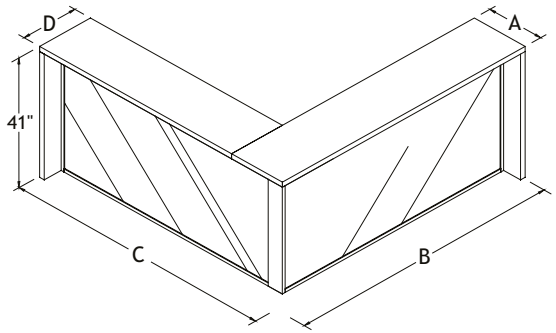

Manufacturing Standards

- RE : 1" top and legs.
  REC : 1-5/8" top and legs.
- 6" recessed translucent white acrylic front with laminate frame (interior and exterior);
- Removable fronts for access to the lighting.

For specification reasons:
- The reception desk RE is 3/4" less than the dimension listed.
- The reception desk REC is 1/8" less than the dimension listed.

Interior width for work desk:
- 60"x 60" work desk fits with a 74"x 74" reception counter;
- 66"x 66" work desk fits with a 80"x 80" reception counter;
- 72"x 72" work desk fits with a 86"x 86" reception counter.

LED option: *Neutral white LED backlighting with a dimmer switch installed on the back of the counter, user side.*

Prices

Dimensions A B C D	RE (D0)	RE (D1)	RE (D2)	REC (D0)	REC (D1)	REC (D2)
18 74 74 18	4989	5194	5720	4989	5194	5720
18 80 80 18	5075	5279	5838	5075	5279	5838
18 86 86 18	5165	5369	5960	5165	5369	5960

LED Lighting

D0
No LED

D1
LED on top only

D2
LED on top and bottom

Combination of Colors

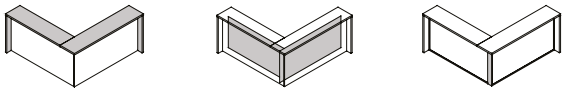

Top & Legs
Color available for the REC serie in 1-5/8" only

Base
1" panel on user side

Front
1" laminate frame around acrylic panel

How to Order

	RE REC	ABCD			D0 D1 D2	L R	Combination of Colors *See the Logiflex Color Chart (p. 11)*		
			41	**MC-A**					
	series	dimensions	height	product	LED	direction	top & legs	base	front
Example	**REC**	18868618	**41**	**MC-A**	D2	R	SW	W	SW

Monochrom - Straight Reception Counter

MON

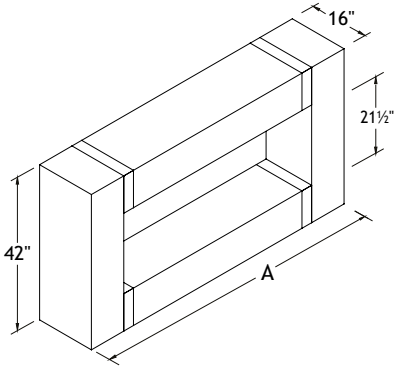

Combination of Colors

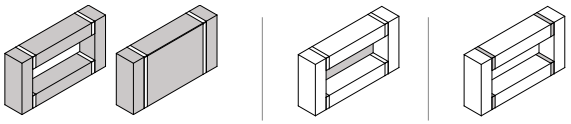

Frame and Back
2 Monochrom finishes:
Carbon **CBM** and Chalk **CKM**

Recessed Front

Wood Insert

Manufacturing Standards

- Delivered disassembled;
- Monochrom straight reception counter with wood inserts;
- Monochrom anti-fingerprint, matte finish on frame and back;
- HPL recessed front 14-1/4";
- Removable back for installation;
- Height: 42"

***Note:** for stability purposes it is recommended that the 16" reception counter be attached to a desk.*

***Recessed Front** : HPL finishes according to the available colors from Logiflex, see Appendix A. The Carbon **CBM**, Chalk **CKM** and Piazza cement **PIC** finishes can also be used.*

***Wood Insert** : White Wash **WW**, Golden Wheat **GW**, Sand **SD**, Apricot **AT**, Pecan **PN**, Brandy **BR**, Chestnut **CT**, Coffee **CF**, Espresso **ES**, Bordeaux **BO**, Black Wash **BW** and Bark **BK**.*

Desks and storage sold separately. This counter can accommodate a desk of the same width.

Options

LED Option

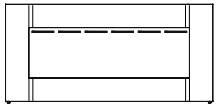

LED on top only

D1
$835

Prices

Dimensions A	
60	15 329
66	15 601
72	15 876
78	16 149

How to Order

		A		D1	CKM CBM	**Combination of Colors** *See the Logiflex Color Chart (p. 15)*	**Finishes** *See the Logiflex Color Guide*
	REM		**MON**				
	series	dimension	product	Led	frame color	front color	wood insert
Example	**REM**	60	**MON**	D1	CBM	W	GW

Monochrom - Left L-Shaped Reception Counter

MONL

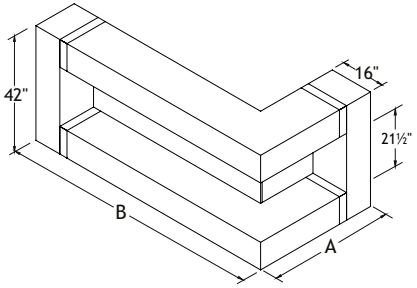

Combination of Colors

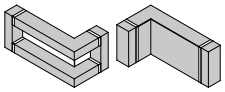

Frame and Back
2 Monochrom finishes:
Carbon **CBM** and Chalk **CKM**

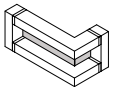

Recessed Front

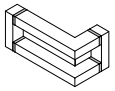

Wood Insert

Manufacturing Standards

- Delivered disassembled;
- Monochrom L-shaped reception counter with wood inserts;
- Monochrom anti-fingerprint, matt finish on frame and back;
- HPL recessed front 14-1/4";
- Removable backs for installation;
- Height: 42"

Recessed Front *: HPL finishes according to the available colors from Logiflex, see Appendix A. The Carbon* ***CBM****, Chalk* ***CKM*** *and Piazza cement* ***PIC*** *finishes can also be used.*

Wood Insert *: White Wash* ***WW****, Golden Wheat* ***GW****, Sand* ***SD****, Apricot* ***AT****, Pecan* ***PN****, Brandy* ***BR****, Chestnut* ***CT****, Coffee* ***CF****, Espresso* ***ES****, Bordeaux* ***BO****, Black Wash* ***BW*** *and Bark* ***BK****.*

Suggested model for a linear desk configuration.

Desks and storage sold separately. For more information, see Appendix F.

Options

LED Option

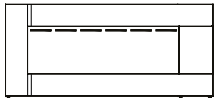

LED on top only

D1
$1 187

Prices

Dimensions A	B
40	76
46	76
40	82
46	82
40	88
46	88
40	94
46	94

A	B
23	340
23	613
23	885
24	161
24	434
24	707
24	980
25	255

How to Order

		AB		D1	CKM CBM	**Combination of Colors** *See the Logiflex Color Chart (p. 15)*	**Finishes** *See the Logiflex Color Guide*
	REM		**MONL**				
	series	dimensions	product	Led	frame color	front color	wood insert
Example	**REM**	4076	**MONL**	D1	CBM	W	GW

Monochrom - Right L-Shaped Reception Counter

MONR

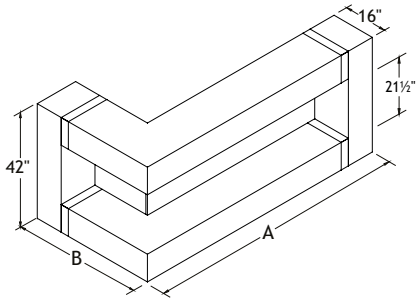

Combination of Colors

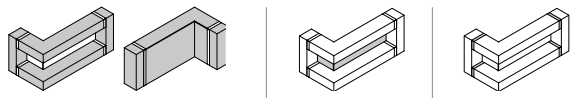

Frame and Back
2 Monochrom finishes:
Carbon **CBM** and Chalk **CKM**

Recessed Front

Wood Insert

Manufacturing Standards

- Delivered disassembled;
- Monochrom L-shaped reception counter with wood inserts;
- Monochrom anti-fingerprint, matt finish on frame and back;
- HPL recessed front 14-1/4";
- Removable backs for installation;
- Height: 42"

Recessed Front *: HPL finishes according to the available colors from Logiflex, see Appendix A. The Carbon **CBM**, Chalk **CKM** and Piazza cement **PIC** finishes can also be used.*

Wood Insert *: White Wash **WW**, Golden Wheat **GW**, Sand **SD**, Apricot **AT**, Pecan **PN**, Brandy **BR**, Chestnut **CT**, Coffee **CF**, Espresso **ES**, Bordeaux **BO**, Black Wash **BW** and Bark **BK**.*

Suggested model for a linear desk configuration.

Desks and storage sold separately. For more information, see Appendix F.

Options

LED Option

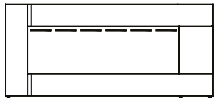

LED on top only

D1
$1 187

Prices

Dimensions A	B
76	40
76	46
82	40
82	46
88	40
88	46
94	40
94	46

23 340	
23 613	
23 885	
24 161	
24 434	
24 707	
24 980	
25 255	

How to Order

		AB		D1	CKM CBM	**Combination of Colors** *See the Logiflex Color Chart (p. 15)*	**Finishes** *See the Logiflex Color Guide*
	REM		**MONR**				
	series	dimensions	product	Led	frame color	front color	wood insert
Example	**REM**	7640	**MONR**	D1	CBM	W	GW

Monochrom - Left L-Shaped Reception Counter

MONL

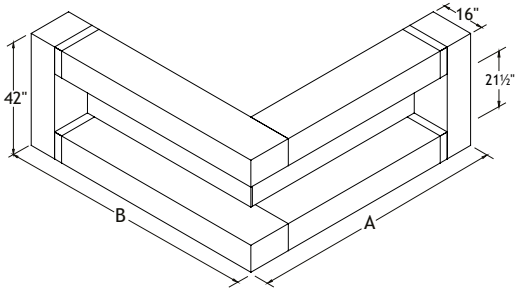

Combination of Colors

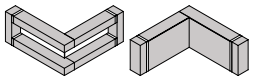

Frame and Back
2 Monochrom finishes:
Carbon **CBM** and Chalk **CKM**

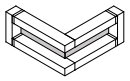

Recessed Front

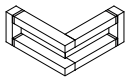

Wood Insert

Manufacturing Standards

- Delivered disassembled;
- Monochrom L-shaped reception counter with wood inserts;
- Monochrom anti-fingerprint, matt finish on frame and back;
- HPL recessed front 14-1/4";
- Removable backs for installation;
- Height: 42"

Recessed Front *: HPL finishes according to the available colors from Logiflex, see Appendix A. The Carbon* ***CBM****, Chalk* ***CKM*** *and Piazza cement* ***PIC*** *finishes can also be used.*

Wood Insert *: White Wash* ***WW****, Golden Wheat* ***GW****, Sand* ***SD****, Apricot* ***AT****, Pecan* ***PN****, Brandy* ***BR****, Chestnut* ***CT****, Coffee* ***CF****, Espresso* ***ES****, Bordeaux* ***BO****, Black Wash* ***BW*** *and Bark* ***BK****.*

Suggested model for "L" configuration.

Desks and storage sold separately. For more information, see Appendix F.

Options

LED Option

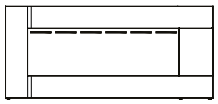

LED on top only

D1
$1 466

How to Order

		AB		D1	CKM CBM	**Combination of Colors** *See the Logiflex Color Chart (p. 15)*	**Finishes** *See the Logiflex Color Guide*
	REM		**MONL**				
	series	dimensions	product	Led	frame color	front color	wood insert
Example	**REM**	7076	**MONL**	D1	CBM	W	GW

Prices

Dimensions A	B
70	76
76	76
70	82
76	82
82	82
70	88
76	88
82	88
88	88
70	94
76	94
82	94
88	94
94	94

23	421
23	762
24	104
24	447
24	789
25	131
25	473
25	816
26	157
26	498
26	839
27	182
27	525
27	865

Monochrom - Right L-Shaped Reception Counter

MONR

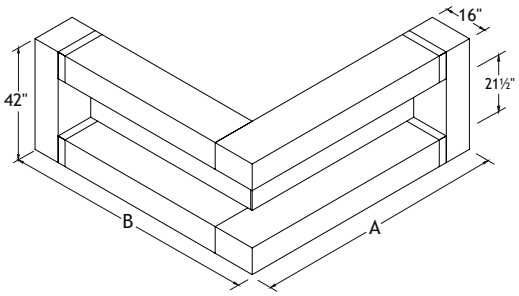

Combination of Colors

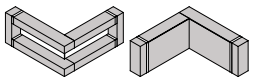

Frame and Back
2 Monochrom finishes:
Carbon **CBM** and Chalk **CKM**

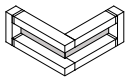

Recessed Front

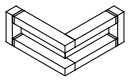

Wood Insert

Manufacturing Standards

- Delivered disassembled;
- Monochrom L-shaped reception counter with wood inserts;
- Monochrom anti-fingerprint, matt finish on frame and back;
- HPL recessed front 14-1/4";
- Removable backs for installation;
- Height: 42"

Recessed Front *: HPL finishes according to the available colors from Logiflex, see Appendix A. The Carbon* ***CBM****, Chalk* ***CKM*** *and Piazza cement* ***PIC*** *finishes can also be used.*

Wood Insert *: White Wash* ***WW****, Golden Wheat* ***GW****, Sand* ***SD****, Apricot* ***AT****, Pecan* ***PN****, Brandy* ***BR****, Chestnut* ***CT****, Coffee* ***CF****, Espresso* ***ES****, Bordeaux* ***BO****, Black Wash* ***BW*** *and Bark* ***BK****.*

Suggested model for "L" configuration.

Desks and storage sold separately. For more information, see Appendix F.

Options

LED Option

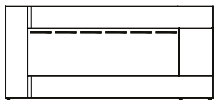

LED on top only

D1
$1 466

Prices

Dimensions A	B
76	70
76	76
82	70
82	76
82	82
88	70
88	76
88	82
88	88
94	70
94	76
94	82
94	88
94	94
23	421
23	762
24	104
24	447
24	789
25	131
25	473
25	816
26	157
26	498
26	839
27	182
27	525
27	865

How to Order

		AB		D1	CKM CBM	**Combination of Colors** *See the Logiflex Color Chart (p. 15)*	**Finishes** *See the Logiflex Color Guide*
	REM		**MONR**				
	series	dimensions	product	Led	frame color	front color	wood insert
Example	**REM**	7670	**MONR**	D1	CBM	W	GW

Inbox - Left L-Shaped Counter

INBL L

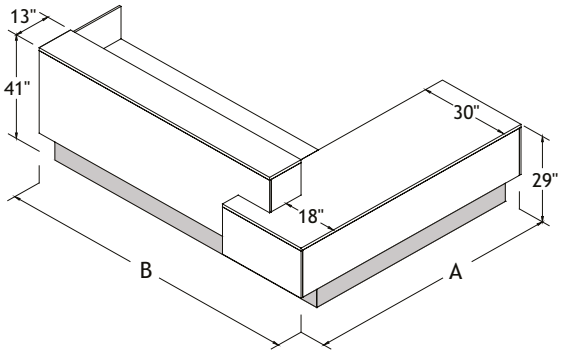

Combination of Colors

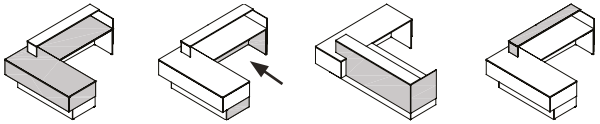

Top **Base** **Front** **Shelf**

Manufacturing Standards

- Delivered disassembled;
- 1" tops;
- Metallic high pressure laminate kick plate;
- 2 CCPF grommets on the main work surface.

Pedestal: *To add a pedestal, see Pedestals for Inbox Collection starting at page 36.*

LED option: *Neutral white LED strips illuminating the kick plate, with a dimmer switch installed on the desk top.*

Options

Grommet Position

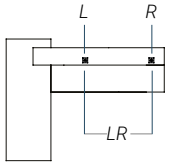

Grommet Style

ELPF $0 | C_PF $0

LED Option

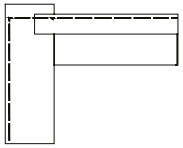

DEL $705

How to Order

					NGR GRL GRR **GLR (std)**	ELPF CAPF CBPF CDPF **CCPF (std)**		**Combination of Colors** *See the Logiflex Color Chart (p. 11)*			
	AB										
	RE		**INBL**	**L**							
	series	dimensions	product	direction	grommet position	grommet style	LED	top	base	front	shelf
Example	**RE**	84100	**INBL**	**L**	GLR	CCPF		LL	W	W	W

Prices

Dimensions A	B	Std
72	82	5216
72	88	5263
72	94	5311
72	100	5358
78	82	5263
78	88	5311
78	94	5358
78	100	5406
84	82	5311
84	88	5357
84	94	5406
84	100	5454

Inbox - Right L-Shaped Counter

INBL R

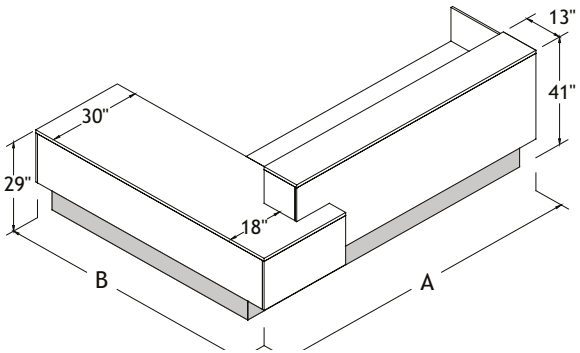

Combination of Colors

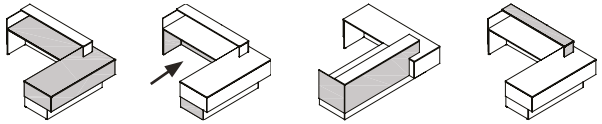

Top **Base** **Front** **Shelf**

Manufacturing Standards

- Delivered disassembled;
- 1" tops;
- Metallic high pressure laminate kick plate;
- 2 CCPF grommets on the main work surface.

Pedestal: *To add a pedestal, see Pedestals for Inbox Collection starting at page 36.*

LED option: *Neutral white LED strips illuminating the kick plate, with a dimmer switch installed on the desk top.*

Options

Grommet Position

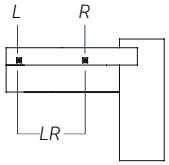

Grommet Style

ELPF $0 | C_PF $0

LED Option

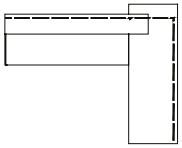

DEL $705

How to Order

		AB			NGR GRL GRR **GLR (std)**	ELPF CAPF CBPF CDPF **CCPF (std)**		**Combination of Colors** *See the Logiflex Color Chart (p. 11)*			
	RE		**INBL**	**R**							
	series	dimensions	product	direction	grommet position	grommet style	LED	top	base	front	shelf
Example	**RE**	10084	**INBL**	**R**	GLR	CCPF		LL	W	W	W

Prices

Dimensions A	B	Std
82	72	5216
88	72	5263
94	72	5311
100	72	5358
82	78	5263
88	78	5311
94	78	5358
100	78	5406
82	84	5311
88	84	5357
94	84	5406
100	84	5454

Inbox - Left U-Shaped Counter

INBU L

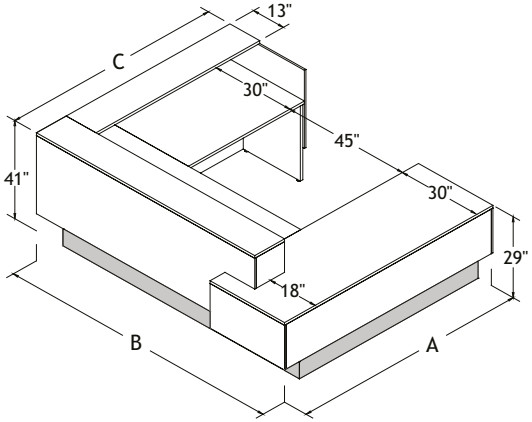

Combination of Colors

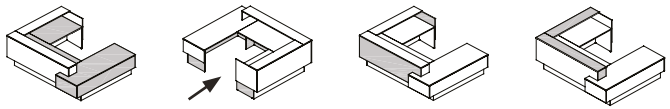

Top **Base** **Front** **Shelf**

Manufacturing Standards

- Delivered disassembled;
- 1" tops;
- Metallic high pressure laminate kick plate;
- 3 CCPF grommets.

Pedestal: *To add a pedestal, see Pedestals for Inbox Collection starting at page 36.*

LED option: *Neutral white LED strips illuminating the kick plate, with a dimmer switch installed on the desk top.*

Options

Grommet Position

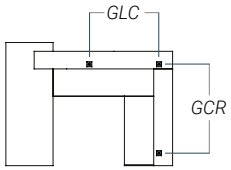

3 grommets (GR3)

Grommet Style

ELPF $0 | C_PF $0

LED Option

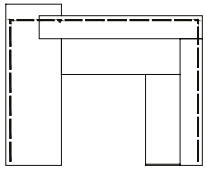

DEL $986

Prices

Dimensions A	B	C	Std
72	106	66	7136
84	106	78	7327

How to Order

	series	dimensions	product	direction	grommet position	grommet style	LED	top	base	front	shelf
	RE	ABC	INBU	L	NGR GCR GLC **GR3 (std)**	ELPF CAPF CBPF CDPF **CCPF (std)**					
Example	RE	8410678	INBU	L	GR3	CCPF		LL	W	W	W

Combination of Colors
See the Logiflex Color Chart (p. 11)

Inbox - Right U-Shaped Counter

INBU R

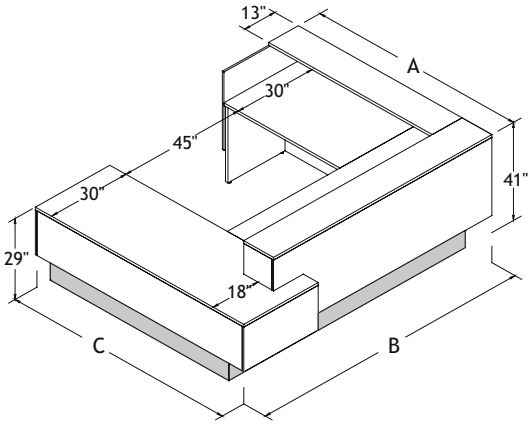

Combination of Colors

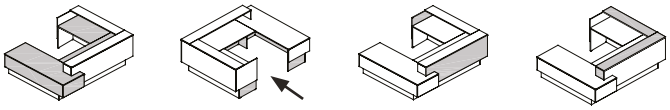

Top **Base** **Front** **Shelf**

Manufacturing Standards

- Delivered disassembled;
- 1" tops;
- Metallic high pressure laminate kick plate;
- 3 CCPF grommets.

Pedestal: *To add a pedestal, see Pedestals for Inbox Collection starting at page 36.*

LED option: *Neutral white LED strips illuminating the kick plate, with a dimmer switch installed on the desk top.*

Options

Grommet Position

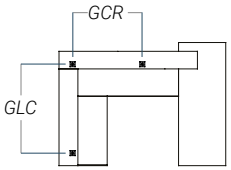

3 grommets (GR3)

Grommet Style

ELPF $0 | C_PF $0

LED Option

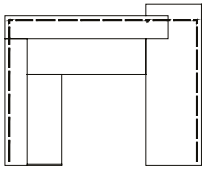

DEL $986

Prices

Dimensions A	B	C	Std
66	106	72	7136
78	106	84	7327

How to Order

	ABC				NGR GCR GLC **GR3 (std)**	ELPF CAPF CBPF CDPF **CCPF (std)**		**Combination of Colors** *See the Logiflex Color Chart (p. 11)*			
	RE		**INBU**	**R**							
	series	dimensions	product	direction	grommet position	grommet style	LED	top	base	front	shelf
Example	**RE**	7810684	**INBU**	**R**	GR3	CCPF		LL	W	W	W

Inbox - Transaction Shelf

INBS

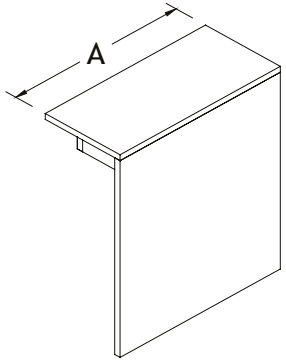

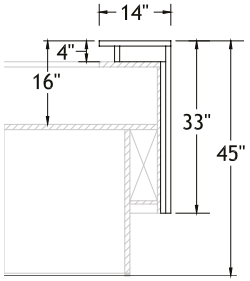

Combination of Colors

Top **Base** **Front**

Manufacturing Standards

- Made of laminate, to be attached to an Inbox reception counter;
- 1" transaction shelf comes in 2 pieces, available in:
  - Laminate **(M)**
  - Stained wood **(W)**

Wood finishes: *Available colors: White Wash **WW**, Golden Wheat **GW**, Sand **SD**, Apricot **AT**, Pecan **PN**, Brandy **BR**, Chestnut **CT**, Coffee **CF**, Espresso **ES**, Bordeaux **BO**, Black Wash **BW** and Bark **BK**.*

Prices

Dimensions A	Code	Front Finish Std
30	INBS M	997
30	INBS W	1600

How to Order

Combination of Colors
See the Logiflex Color Chart (p. 11)

	series	dimensions	product	finish (M / W)	top	base	front
	RE	**A**	**INBS**				
Example	**RE**	30	**INBS**	M	W	LL	W

Inbox - D, E and F Pedestals for Inbox Collection

D

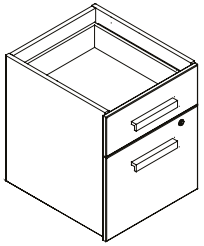

E

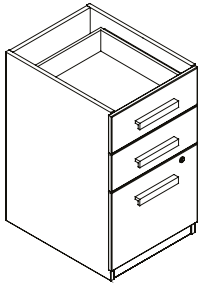

F

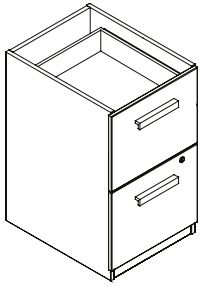

Note: The above illustrations represents the left overlapping drawer front.

Manufacturing Standards

- Pedestals without tops for Inbox;
- H052 CHR handle;
- D = 1 utility drawer and 1 file drawer;
- E = 2 utility drawers and 1 file drawer;
- F = 2 file drawers;
- Lock.

Width : Letter size -15-3/4"
Width : Legal size - 18-3/4"

For installation by client on existing furniture.

Handles: *For handles other than H052CHR standard, please choose from the Logiflex list at no extra charge.*

Options

Drawer Direction
It is important to specify the drawer direction as the drawer front is offset and overlaps the leg on the side.
Ex: the left drawer front overlaps the left leg.

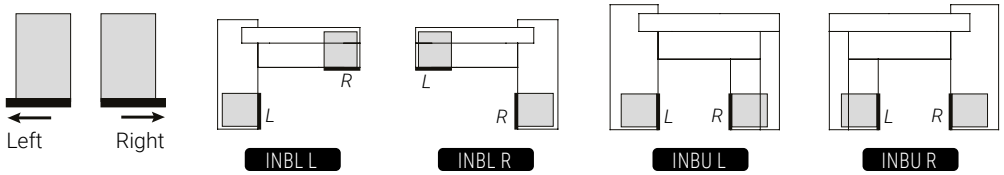

Legal Size

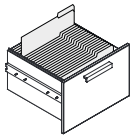

X

How to Order

		D E F	L R	X
RE	INBOX			
series	code	code	direction	legal size
Example RE	INBOX	D	L	X

Prices

Code	Std
INBOXD	785
INBOXDX	881
INBOXE	983
INBOXEX	1071
INBOXF	983
INBOXFX	1071

Inbox - Combination Pedestals for Inbox Collection

CBCL-L

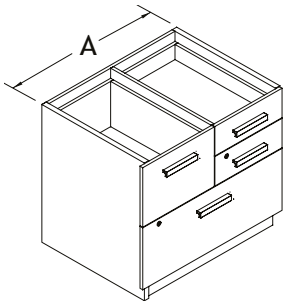

The above illustrations represents the left overlapping drawer front.

BCCL-R

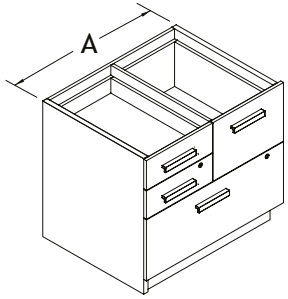

The above illustrations represents the right overlapping drawer front.

Manufacturing Standards

- Pedestals without tops for Inbox;
- 2 utlilty drawers, 1 filing drawer and 1 lateral filing drawer;
- H052 CHR handles;
- Crossbars;
- Locks.

For installation by client on existing furniture.

Handles: *For handles other than H052CHR standard, please choose from the Logiflex list at no extra charge.*

Options

Drawer Direction

It is important to specify the drawer direction as the drawer front is offset and overlaps the leg on the side.
Ex: the left drawer front overlaps the left leg.

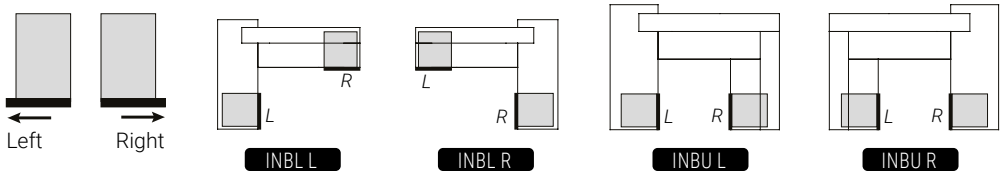

Prices

Width A	Std
30	1650
36	1746

How to Order

		CBCL BCCL	30 36	L R
RE	**INBOX**			
series	code	code	width	direction
Example **RE**	**INBOX**	BCCL	36	R

Inbox - Two Drawer Lateral Filing Cabinet for Inbox Collection

CL

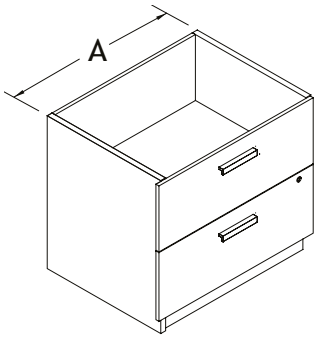

Note: The above illustrations represents the left overlapping drawer front.

Manufacturing Standards

- Pedestals without tops for Inbox;
- 2 lateral filing drawers;
- H052 CHR handles;
- Crossbars;
- Lock.

For installation by client on existing furniture.

Handles: *For handles other than H052CHR standard, please choose from the Logiflex list at no extra charge.*

Options

Drawer Direction
It is important to specify the drawer direction as the drawer front is offset and overlaps the leg on the side.
Ex: the left drawer front overlaps the left leg.

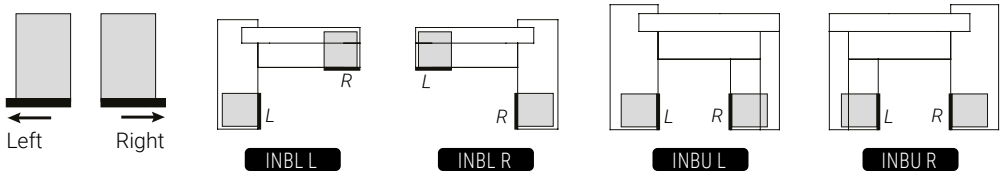

Prices

Width A	Std
30	1154
36	1248
42	1288

How to Order

			30 36 42	L R
RE	**INBOX**	**CL**		
series	code	code	width	direction
Example **RE**	**INBOX**	**CL**	36	L

Reception 3K - Reception Desk with One Full Length Transaction Shelf

3K1

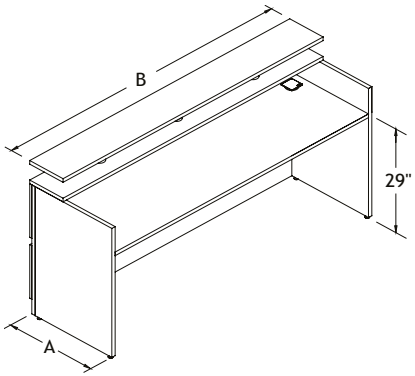

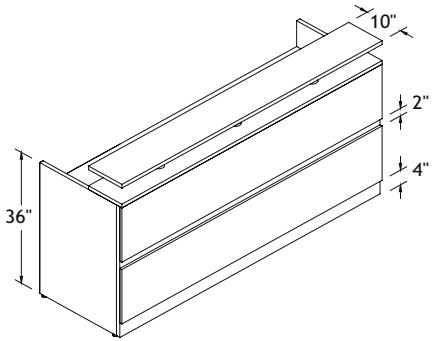

Combination of Colors

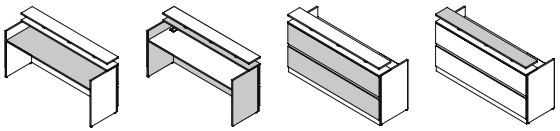

Top **Base** **Front** **Shelf**

Manufacturing Standards

- 1" tops;
- 2 CCPF grommets;
- Full modesty panel;
- 2 front panels 5/8" thick;
- Strip of brushed aluminum high pressure laminate on the kick plate and between the front panels;
- Shelf brackets are 1.75" in diameter, 4-3/8" high and have a Satin Nickel finish.

***Note:** for stability purposes the 24" 3K1 and 3K2 reception desks must be attached to either a pedestal or a return.*

Options

Grommet Position

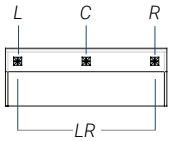

Grommet Style

ELPF $0

C_PF $28 ea.

Installed Pedestals

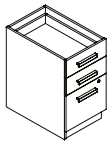

Specify installed pedestals, starting on p. 73

Prices

Dimensions A	B	Std
* 24	66	3342
* 24	72	3641
* 24	78	3953
* 24	84	4257
* 24	96	4862
30	66	3404
30	72	3712
30	78	4032
30	84	4346
30	96	4955

How to Order

		option ($)	AB	option ($)		NGR GRL GRR GRC **GLR (std)**	ELPF CAPF CBPF CDPF **CCPF (std)**	L29 R29 RET3KL RET3KR	**Combination of Colors** *See the Logiflex Color Chart (p. 11)*			
	RE				**3K1**							
	series	pedestal on left	dimensions	pedestal on right	product	grommet position	grommet style	reception return	top	base	front	shelf
Example	**RE**	E	2466		**3K1**	GLR	CCPF		W	SW	SW	W

Reception 3K - Reception Desk with Two Transaction Shelves

3K2

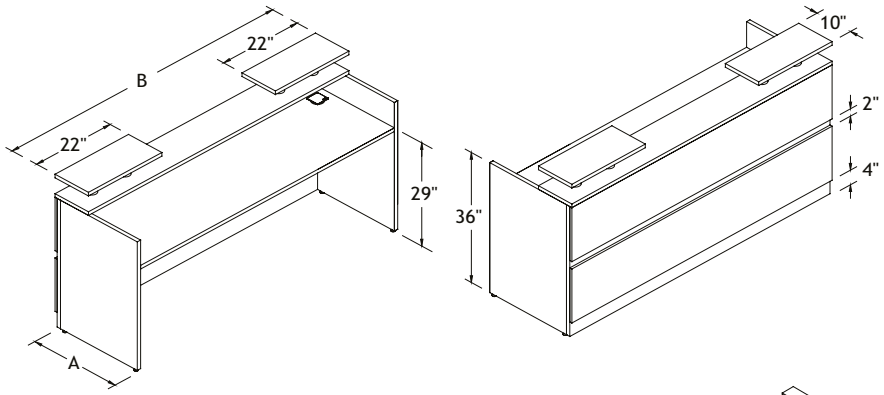

Combination of Colors

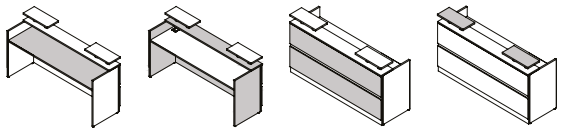

Top **Base** **Front** **Shelf**

Manufacturing Standards

- 1" tops;
- 2 CCPF grommets;
- Full modesty panel;
- 2 front panels 5/8" thick;
- Strip of brushed aluminum high pressure laminate on the kick plate and between the front panels;
- Shelf brackets are 1.75" in diameter, 4-3/8" high and have a Satin Nickel finish.

***Note:** for stability purposes the 24" 3K1 and 3K2 reception desks must be attached to either a pedestal or a return.*

Options

Grommet Position

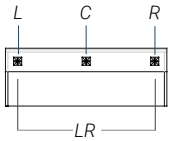

Grommet Style

ELPF $0

C_PF $28 ea.

Installed Pedestals

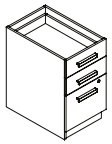

Specify installed pedestals, starting on p. 73

Prices

Dimensions A	B	Std
* 24	66	3342
* 24	72	3641
* 24	78	3953
* 24	84	4257
* 24	96	4862
30	66	3404
30	72	3712
30	78	4032
30	84	4346
30	96	4955

How to Order

		option ($)	AB	option ($)		NGR GRL GRR GRC **GLR (std)**	ELPF CAPF CBPF CDPF **CCPF (std)**	L29 R29 RET3KL RET3KR	**Combination of Colors** *See the Logiflex Color Chart (p. 11)*			
	RE				**3K2**							
	series	pedestal on left	dimensions	pedestal on right	product	grommet position	grommet style	reception return	top	base	front	shelf
Example	**RE**	E	2466		**3K2**	GLR	CCPF		W	SW	SW	W

Reception 3K - Return

RET 3K L

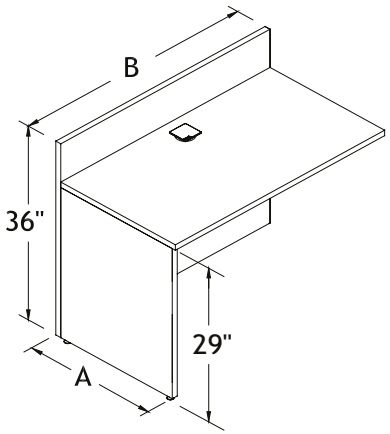

RET 3K R

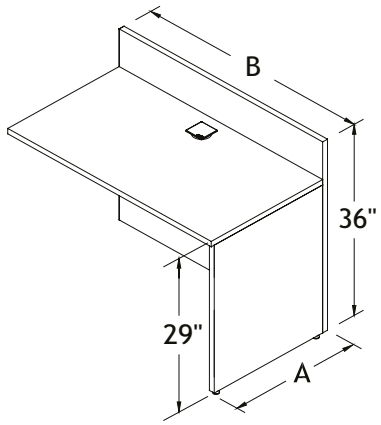

Combination of Colors

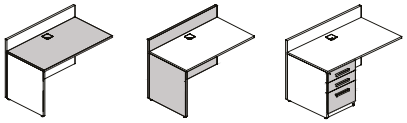

Top **Base** **Front**

Manufacturing Standards

- 1" tops;
- Centred CCPF grommet;
- Full modesty panel.

Options

Grommet Position

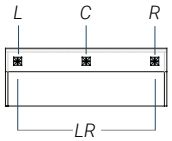

Grommet Style

ELPF $0

C_PF $28 ea.

Installed Pedestals

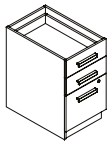

Specify installed pedestals, starting on p. 73

Prices

Dimensions A	B
24 30	837
24 36	868
24 42	914
24 48	959

How to Order

		AB	option ($)		L R	NGR GRL GRR GLR **GRC (std)**	ELPF CAPF CBPF CDPF **CCPF (std)**	**Combination of Colors** *See the Logiflex Color Chart (p. 11)*		
	RE			**RET 3K**						
	series	dimensions	pedestal	product	direction	grommet position	grommet style	top	base	front
Example	**RE**	2442	E	**RET 3K**	L	GRC	CCPF	SW	SW	W

Gallery - Rectangular Reception Desk with Shelf

GA

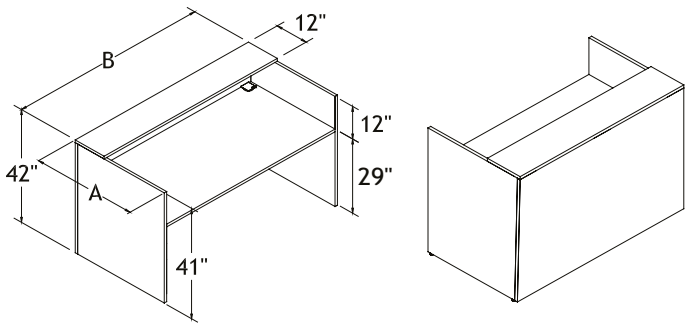

Combination of Colors

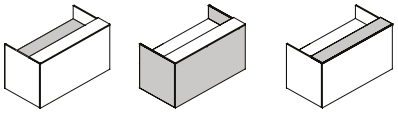

Top | Base | Shelf

Manufacturing Standards

- Rectangular reception desk;
- 42"H transaction shelf;
- CCPF grommets on left and right.

Tips & Tricks

You can add an INBS transaction shelf from the Inbox collection to your Gallery rectangular reception desk.

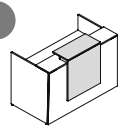

INBS

Options

Grommet Position

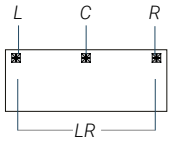

Grommet Style

ELPF $0

C_PF $28 ea.

Installed Pedestals

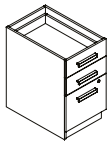

Specify installed pedestals, starting on p. 73

Prices

Dimensions A B	RE 1"	REL 1-1/16"	REC 1-5/8"	RECL 1-9/16"
30 60	1502	2070	1881	2370
30 66	1571	2182	1982	2502
30 72	1650	2312	2102	2671
30 78	1730	2448	2227	2841
30 84	1795	2562	2327	2976
36 60	1523	2174	1978	2502
36 66	1610	2321	2109	2703
36 72	1724	2449	2228	2868
36 78	1757	2583	2347	3029
36 84	1842	2722	2477	3230

How to Order

	RE REL REC RECL	option ($)	AB	option ($)		NGR GRC GRR GRL **GLR (std)**	ELPF CAPF CBPF CDPF **CCPF (std)**	L29 R29 GAL GAR	**Combination of Colors** *See the Logiflex Color Chart (p. 11)*		
					GA						
	series	pedestal on left	dimensions	pedestal on right	product	grommet position	grommet style	reception return	top	base	shelf
Example	RE	E	3660		**GA**	GLR	CCPF		Z	Z	W

Gallery - Rectangular Reception Desk with Convex Shelf

GACX

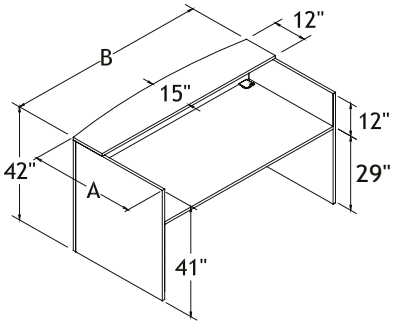

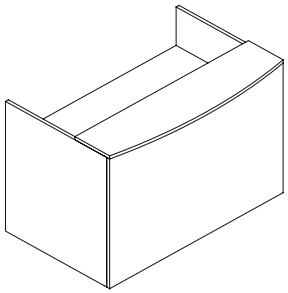

Manufacturing Standards

- Rectangular reception desk;
- 42"H transaction shelf;
- CCPF grommets on left and right.

Combination of Colors

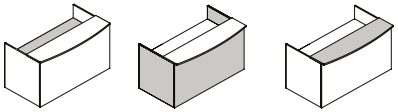

Top **Base** **Shelf**

Options

Grommet Position

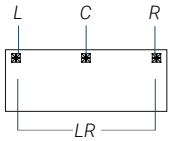

Grommet Style

ELPF $0

C_PF $28 ea.

Installed Pedestals

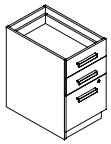

Specify installed pedestals, starting on p. 73

Prices

Dimensions A B	RE 1"	REL 1-1/16"	REC 1-5/8"	RECL 1-9/16"
30 60	1754	2346	2132	2650
30 66	1825	2466	2241	2788
30 72	1906	2595	2358	2950
30 78	1984	2722	2477	3131
30 84	2056	2841	2583	3249
36 60	1778	2451	2231	2788
36 66	1862	2599	2362	2981
36 72	1938	2730	2482	3147
36 78	2009	2861	2599	3315
36 84	2099	3007	2735	3505

How to Order

	RE REL REC RECL	option ($)	AB	option ($)		NGR GRC GRR GRL **GLR (std)**	ELPF CAPF CBPF CDPF **CCPF (std)**	L29 R29 GAL GAR	**Combination of Colors** *See the Logiflex Color Chart (p. 11)*		
					GACX						
	series	pedestal on left	dimensions	pedestal on right	product	grommet position	grommet style	reception return	top	base	shelf
Example	RE	E	3660		**GACX**	GLR	CCPF		Z	Z	W

Gallery - Reception Return

GAL

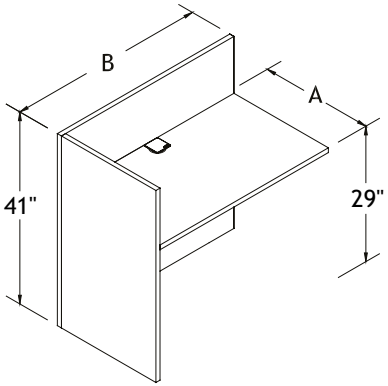

GAR

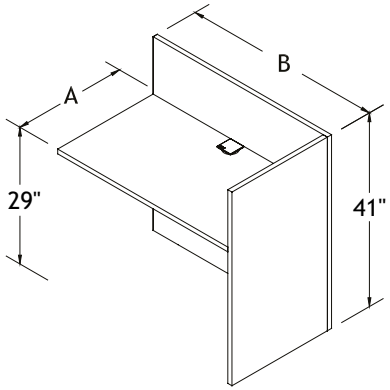

Combination of Colors

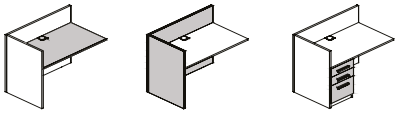

Top **Base** **Front**

Manufacturing Standards

- Reception return;
- CCPF centered grommet.

Options

Grommet Position

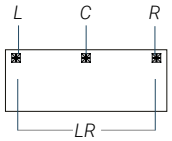

Grommet Style

ELPF $0

C_PF $28 ea.

Installed Pedestals

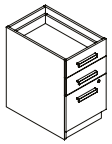

Specify installed pedestals, starting on p. 73

Prices

Dimensions A B	RE 1"	REL 1-1/16"	REC 1-5/8"	RECL 1-9/16"
20 36	859	1121	1018	1196
20 42	930	1220	1109	1307
20 48	997	1321	1203	1420
20 54	1072	1427	1297	1576
20 60	1141	1540	1399	1672
24 36	881	1179	1073	1280
24 42	953	1280	1165	1417
24 48	1025	1389	1263	1518
24 54	1096	1503	1367	1645
24 60	1166	1617	1469	1774

How to Order

	RE REL REC RECL	AB	option ($)	GAR GAL	NGR GLR GRR GRL **GRC (std)**	ELPF CAPF CBPF CDPF **CCPF (std)**	**Combination of Colors** *See the Logiflex Color Chart (p. 11)*		
	series	dimensions	pedestal	product	grommet position	grommet style	top	base	front
Example	RE	2460	E	GAL	GRC	CCPF	Z	Z	W

Spheric - Quarter-Moon Reception Desk with Finishing Shelf

SPH F

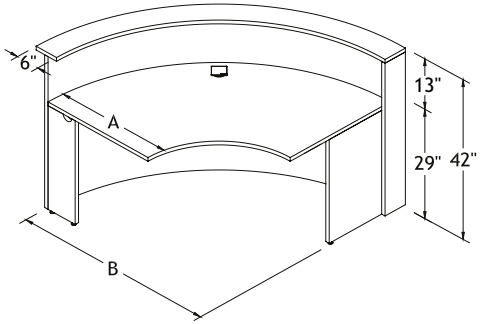

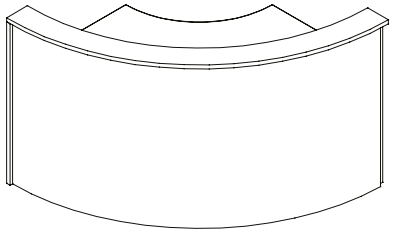

Manufacturing Standards

- 1" top;
- Curved front panels made of high pressure laminate (HPL);
- Centered CCPF grommet;
- 3" aluminum finishing filler when there are 2 adjoining desks.

Direction

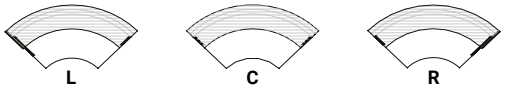

L Finished on left

C No finish *(between 2 desks)*

R Finished on right

Combination of Colors

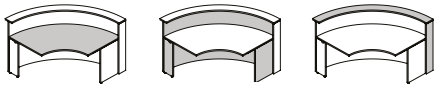

Top **Base** **Shelf**

Options

Grommet Position

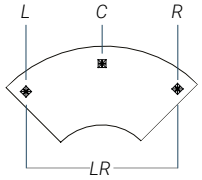

Grommet Style

ELPF $0

C_PF $28 ea.

Prices

Dimensions A	B	
24	46	4609
30	54	5080

How to Order

		AB		L C R	NGR GLR GRR GRL **GRC (std)**	ELPF CAPF CBPF CDPF **CCPF (std)**	**Combination of Colors** *See the Logiflex Color Chart (p. 11)*		
	RE		**SPH F**						
	series	dimensions	product	direction	grommet position	grommet style	top	base	shelf
Example	**RE**	2446	**SPH F**	L	GRC	CCPF	LL	W	LL

Spheric - Quarter-Moon Reception Desk with Transaction Shelf

SPH T

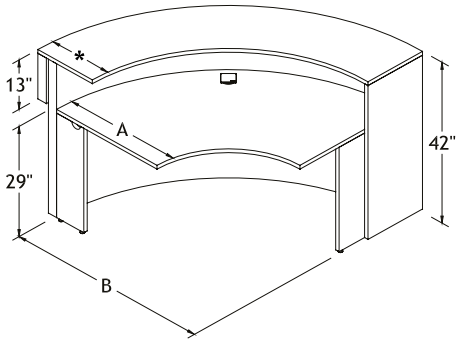

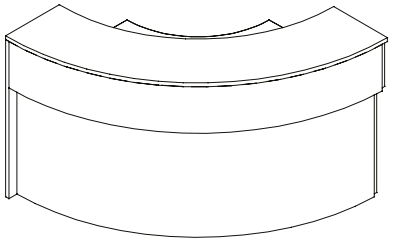

Manufacturing Standards

- 1" top;
- Curved front panels made of high pressure laminate (HPL);
- Centered CCPF grommet;
- 3" aluminum finishing filler when there are 2 adjoining desks.

***Transaction Tops:**
For 24" tops, the transaction shelf is 12";
For 30" tops, the transaction shelf is 16".

Direction

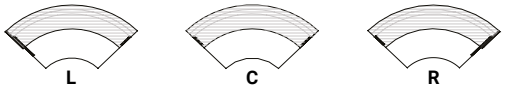

L Finished on left

C No finish *(between 2 desks)*

R Finished on right

Combination of Colors

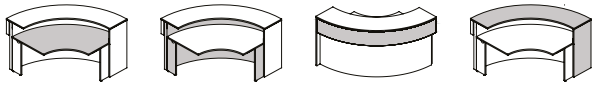

Top **Base** **Front** **Shelf**

Options

Grommet Position

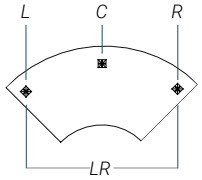

Grommet Style

ELPF $0

C_PF $28 ea.

Prices

Dimensions A	B	
24	46	5890
30	54	6796

How to Order

	series	dimensions	product	direction	grommet position	grommet style	top	base	front	shelf
	RE	AB	SPH T	L C R	NGR GLR GRR GRL **GRC (std)**	ELPF CAPF CBPF CDPF **CCPF (std)**	Combination of Colors *See the Logiflex Color Chart (p. 11)*			
Example	RE	2446	SPH T	L	GRC	CCPF	LL	W	W	LL

Spheric - Quarter-Moon Reception Desk with Transaction Shelf and Pigeonhole Unit

SPH P

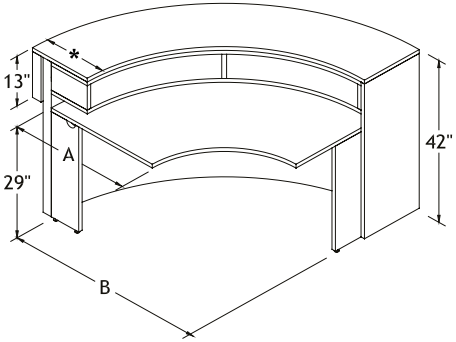

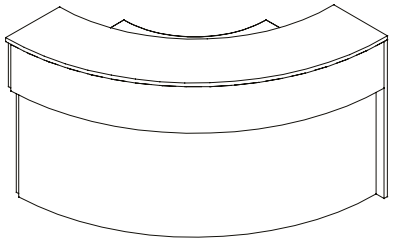

Direction

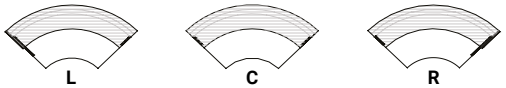

L Finished on left

C No finish *(between 2 desks)*

R Finished on right

Combination of Colors

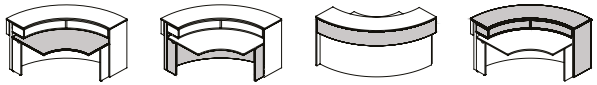

Top **Base** **Front** **Shelf**

Manufacturing Standards

- 1" top;
- Curved front panels made of high pressure laminate (HPL);
- Centered CCPF grommet;
- 3" aluminum finishing filler when there are 2 adjoining desks.

Transaction Tops:
For 24" tops, the transaction shelf is 12";
For 30" tops, the transaction shelf is 16".

Options

Grommet Position

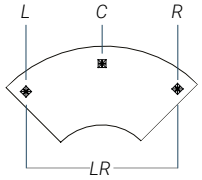

Grommet Style

ELPF $0

C_PF $28 ea.

Prices

Dimensions A	B	
24	46	7491
30	54	8018

How to Order

	series	dimensions	product	direction	grommet position	grommet style	top	base	front	shelf
	RE	AB	SPH P	L C R	NGR GLR GRR GRL **GRC (std)**	ELPF CAPF CBPF CDPF **CCPF (std)**	Combination of Colors *See the Logiflex Color Chart (p. 11)*			
Example	RE	2446	SPH P	L	GRC	CCPF	LL	W	W	LL

Spheric - Quarter-Moon Consulting Desk

SPH C

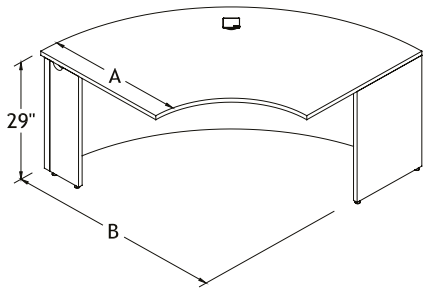

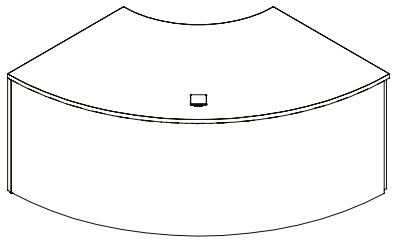

Direction

L
Finished
on left

C
No finish
(between 2 desks)

R
Finished
on right

Combination of Colors

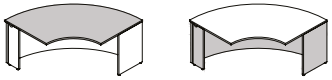

Top **Base**

Manufacturing Standards

- 1" top;
- Curved front panels made of high pressure laminate (HPL);
- Centered CCPF grommet;
- 3" aluminum finishing filler when there are 2 adjoining desks.

Fits with Spherical reception desks:
- 27" consulting desk fits with a 24" reception desk;
- 33" consulting desk fits with a 30" reception desk.

Options

Grommet Position

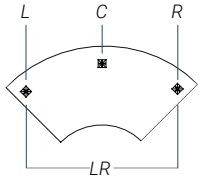

Grommet Style

ELPF
$0

C_PF
$28 ea.

Prices

Dimensions A	B
27	46
33	54

4105	
4354	

How to Order

		AB		L C R	NGR GLR GRR GRL **GRC (std)**	ELPF CAPF CBPF CDPF **CCPF (std)**	**Combination of Colors** *See the Logiflex Color Chart (p. 11)*	
	RE		**SPH C**					
	series	dimensions	product	direction	grommet position	grommet style	top	base
Example	**RE**	2746	**SPH C**	L	GRC	CCPF	LL	W

Spheric - Quarter-Moon Accessible Reception Desk

SPH A

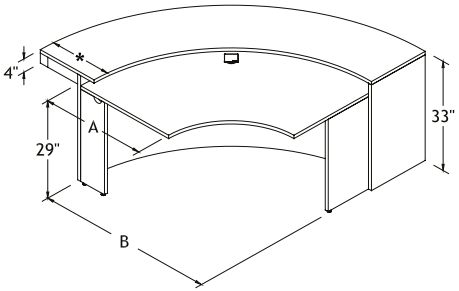

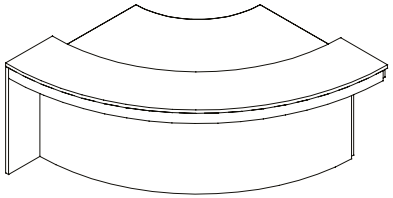

Manufacturing Standards

- 1" top;
- Curved front panels made of high pressure laminate (HPL);
- Centered CCPF grommet;
- 3" aluminum finishing filler when there are 2 adjoining desks.

***Transaction Tops:**
For 24" or 30" tops, the transaction shelf is 16".

Direction

L Finished on left

C No finish *(between 2 desks)*

R Finished on right

Combination of Colors

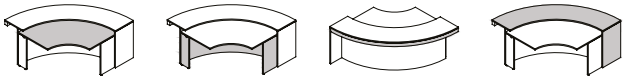

Top **Base** **Front** **Shelf**

Options

Grommet Position

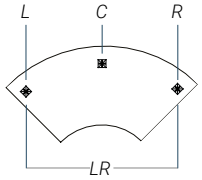

Grommet Style

ELPF $0

C_PF $28 ea.

Prices

Dimensions A	B	
24	46	6228
30	54	6480

How to Order

	series	dimensions	product	direction	grommet position	grommet style	top	base	front	shelf
	RE	AB	SPH A	L C R	NGR GLR GRR GRLL **GRC (std)**	ELPF CAPF CBPF CDPF **CCPF (std)**	Combination of Colors *See the Logiflex Color Chart (p. 11)*			
Example	RE	3054	SPH A	L	GRC	CCPF	LL	W	W	LL

Spheric - Inverted Quarter-Moon Reception Desk with Finishing Shelf

SPH IF

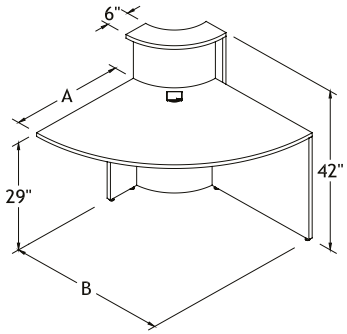

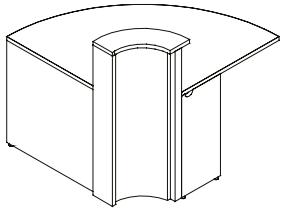

Direction

L
Finished on left

C
No finish
(between 2 desks)

R
Finished on right

Combination of Colors

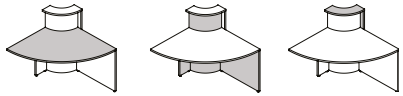

Top **Base** **Shelf**

Manufacturing Standards

- 1" top;
- Curved front panels made of high pressure laminate (HPL);
- Centered CCPF grommet;
- 3" aluminum finishing filler when there are 2 adjoining desks.

Options

Grommet Position

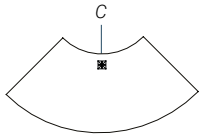

Grommet Style

ELPF
$0

C_PF
$0

Prices

Dimensions A	B	
24	36	4802
30	42	4903

How to Order

		AB		L C R	NGR **GRC (std)**	ELPF CAPF CBPF CDPF **CCPF (std)**	**Combination of Colors** *See the Logiflex Color Chart (p. 11)*			
	RE		**SPH IF**							
	series	dimensions	product	direction	grommet	grommet style	top	base	front	shelf
Example	**RE**	2436	**SPH IF**	L	GRC	CCPF	LL	W	W	LL

Spheric - Inverted Quarter-Moon Reception Desk with Transaction Shelf

SPH IT

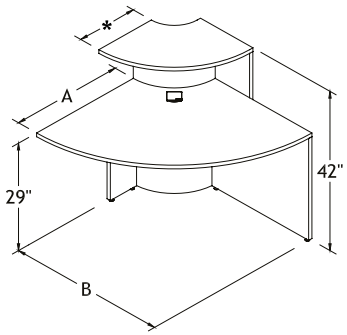

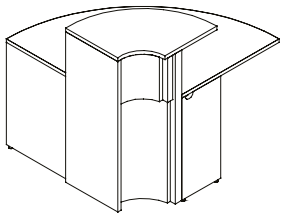

Manufacturing Standards

- 1" top;
- Curved front panels made of high pressure laminate (HPL);
- Centered CCPF grommet;
- 3" aluminum finishing filler when there are 2 adjoining desks.

***Transaction Tops:**
For 24" tops, the transaction shelf is 12";
For 30" tops, the transaction shelf is 16".

Direction

L Finished on left

C No finish *(between 2 desks)*

R Finished on right

Combination of Colors

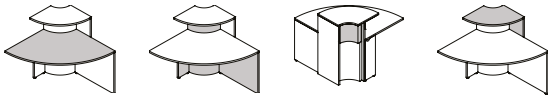

Top **Base** **Front** **Shelf**

Options

Grommet Position

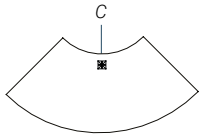

Grommet Style

ELPF $0

C_PF $0

Prices

Dimensions A	B	
24	36	4905
30	42	5079

How to Order

		AB		L C R	NGR **GRC (std)**	ELPF CAPF CBPF CDPF **CCPF (std)**	**Combination of Colors** *See the Logiflex Color Chart (p. 11)*			
	RE		**SPH IT**							
	series	dimensions	product	direction	grommet	grommet style	top	base	front	shelf
Example	**RE**	2436	**SPH IT**	L	GRC	CCPF	LL	W	W	LL

Spheric - Inverted Quarter-Moon Reception Desk with Transaction Shelf and Pigeonhole Unit

SPH IP

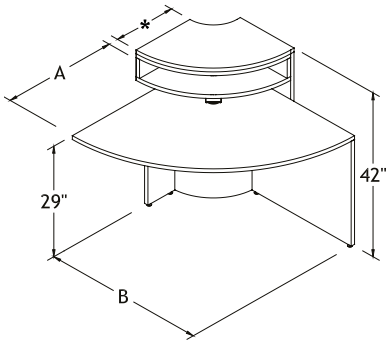

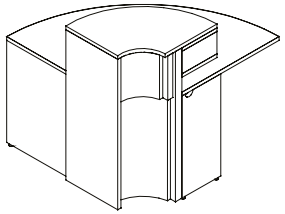

Direction

L
Finished on left

C
No finish
(between 2 desks)

R
Finished on right

Combination of Colors

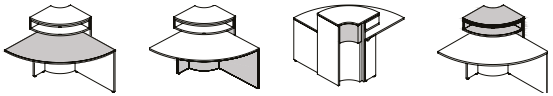

Top **Base** **Front** **Shelf**

Manufacturing Standards

- 1" top;
- Curved front panels made of high pressure laminate (HPL);
- Centered CCPF grommet;
- 3" aluminum finishing filler when there are 2 adjoining desks.

Transaction Tops:
For 24" tops, the transaction shelf is 12";
For 30" tops, the transaction shelf is 16".

Options

Grommet Position

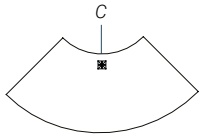

Grommet Style

ELPF
$0

C_PF
$0

Prices

Dimensions A	B	
24	36	6048
30	42	6228

How to Order

		AB		L C R	NGR **GRC (std)**	ELPF CAPF CBPF CDPF **CCPF (std)**	**Combination of Colors** *See the Logiflex Color Chart (p. 11)*			
	RE		**SPH IP**							
	series	dimensions	product	direction	grommet	grommet style	top	base	front	shelf
Example	**RE**	2436	**SPH IP**	L	GRC	CCPF	LL	W	W	LL

Spheric - Inverted Quarter-Moon Consulting Desk

SPH IC

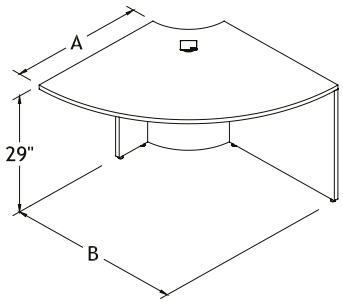

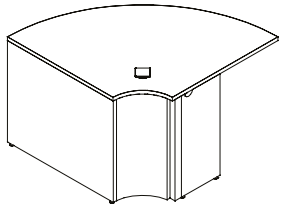

Manufacturing Standards

- 1" top;
- Curved front panels made of high pressure laminate (HPL);
- Centered CCPF grommet;
- 3" aluminum finishing filler when there are 2 adjoining desks.

Fits with Spherical reception desks:
- 27" consulting desk fits with a 24" reception desk;
- 33" consulting desk fits with a 30" reception desk.

Direction

L Finished on left

C No finish *(between 2 desks)*

R Finished on right

Combination of Colors

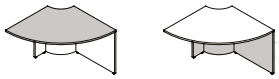

Top **Base**

Options

Grommet Position

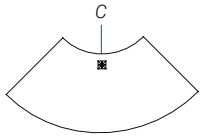

Grommet Style

ELPF $0

C_PF $0

Prices

Dimensions A	B	
27	36	3924
33	42	4105

How to Order

		AB		L C R	NGR **GRC (std)**	ELPF CAPF CBPF CDPF **CCPF (std)**	**Combination of Colors** *See the Logiflex Color Chart (p. 11)*	
	RE		**SPH IC**					
	series	dimensions	product	direction	grommet	grommet style	top	base
Example	**RE**	2736	**SPH IC**	L	GRC	CCPF	LL	W

Spheric - Straight Reception Desk with Finishing Shelf

SPH SF

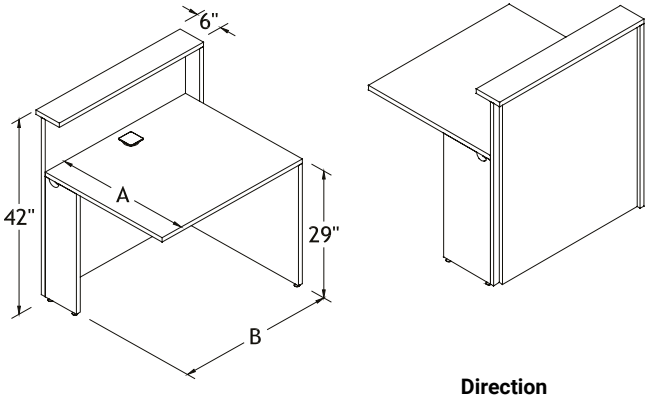

Direction

L Finished on left

C No finish *(between 2 desks)*

R Finished on right

Combination of Colors

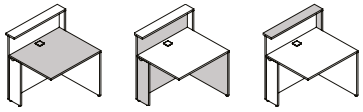

Top **Base** **Shelf**

Manufacturing Standards

- 1" top;
- Front panels made of high pressure laminate (HPL);
- Centered CCPF grommet;
- 3" aluminum finishing filler when there are 2 adjoining desks.

Installed Pedestal Option: *For available installed pedestals, see Work Desks starting on page 73.*

Options

Grommet Position

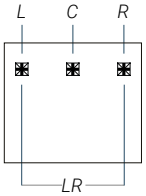

Grommet Style

ELPF $0

C_PF $28 ea.

Installed Pedestals

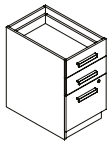

Specify installed pedestals, starting on p. 73

Prices

Dimensions A	B	
24	36	1617
30	36	1668

How to Order

		option ($)	AB	option ($)		L C R	NGR GLR GRR GRL **GRC (std)**	ELPF CAPF CBPF CDPF **CCPF (std)**	**Combination of Colors** *See the Logiflex Color Chart (p. 11)*		
	RE				**SPH SF**						
	series	pedestal on left	dimensions	pedestal on right	product	direction	grommet position	grommet style	top	base	shelf
Example	**RE**	E	2436		**SPH SF**	L	GRC	CCPF	LL	W	LL

Spheric - Straight Reception Desk with Transaction Shelf

SPH ST

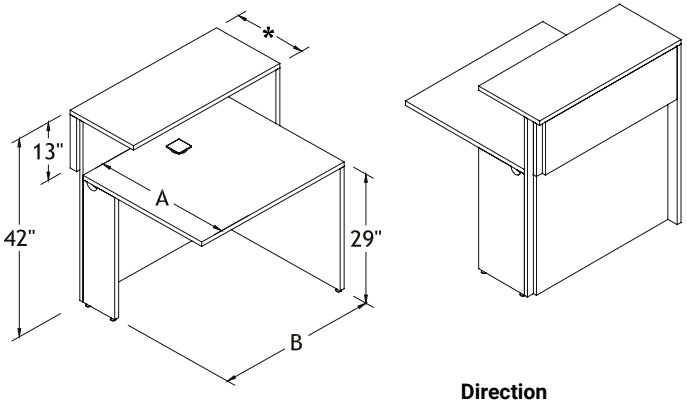

Direction

L Finished on left

C No finish *(between 2 desks)*

R Finished on right

Combination of Colors

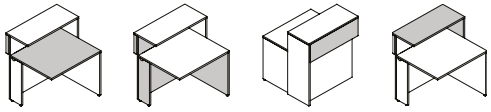

Top **Base** **Front** **Shelf**

Manufacturing Standards

- 1" top;
- Front panels made of high pressure laminate (HPL);
- Centered CCPF grommet;
- 3" aluminum finishing filler when there are 2 adjoining desks.

Transaction Tops:
For 24" tops, the transaction shelf is 12";
For 30" tops, the transaction shelf is 16".

Installed Pedestal Option: *For available installed pedestals, see Work Desks starting on page 73.*

Options

Grommet Position

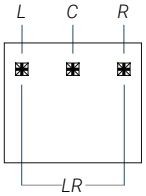

Grommet Style

ELPF $0

C_PF $28 ea.

Installed Pedestals

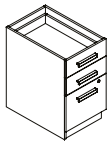

Specify installed pedestals, starting on p. 73

Prices

Dimensions A	B	
24	36	1815
30	36	1867

How to Order

		option ($)	AB	option ($)		L C R	NGR GLR GRR GRL **GRC (std)**	ELPF CAPF CBPF CDPF **CCPF (std)**	**Combination of Colors** *See the Logiflex Color Chart (p. 11)*			
	RE				**SPH ST**							
	series	pedestal on left	dimensions	pedestal on right	product	direction	grommet position	grommet style	top	base	front	shelf
Example	**RE**	E	2436		**SPH ST**	L	GRC	CCPF	LL	W	W	LL

Spheric - Straight Reception Desk with Transaction Shelf and Pigeonhole Unit

SPH SP

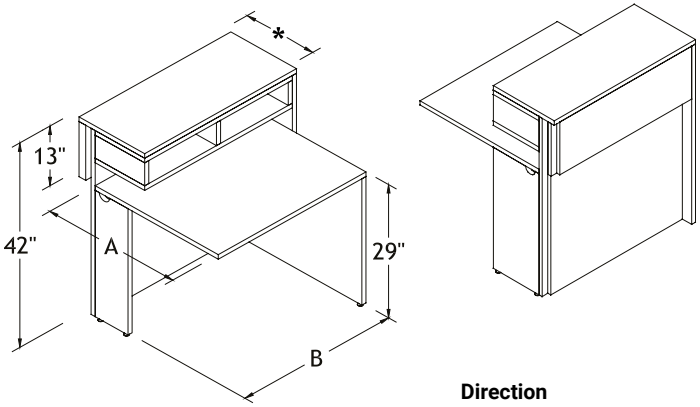

Direction

L Finished on left

C No finish *(between 2 desks)*

R Finished on right

Combination of Colors

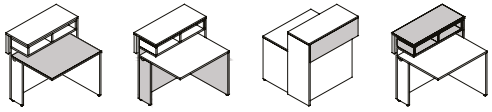

Top **Base** **Front** **Shelf**

Manufacturing Standards

- 1" top;
- Front panels made of high pressure laminate (HPL);
- Centered CCPF grommet;
- 3" aluminum finishing filler when there are 2 adjoining desks.

Transaction Tops:
For 24" tops, the transaction shelf is 12";
For 30" tops, the transaction shelf is 16".

Installed Pedestal Option: *For available installed pedestals, see Work Desks starting on page 73.*

Options

Grommet Position

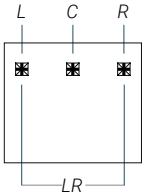

Grommet Style

ELPF $0

C_PF $28 ea.

Installed Pedestals

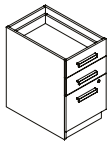

Specify installed pedestals, starting on p. 73

Prices

Dimensions A	B	
24	36	2132
30	36	2220

How to Order

		option ($)	AB	option ($)		L C R	NGR GLR GRR GRL **GRC (std)**	ELPF CAPF CBPF CDPF **CCPF (std)**	**Combination of Colors** *See the Logiflex Color Chart (p. 11)*			
	RE				**SPH SP**							
	series	pedestal on left	dimensions	pedestal on right	product	direction	grommet position	grommet style	top	base	front	shelf
Example	**RE**	E	2436		**SPH SP**	L	GRC	CCPF	LL	W	W	LL

Spheric - Straight Consulting Desk

SPH SC

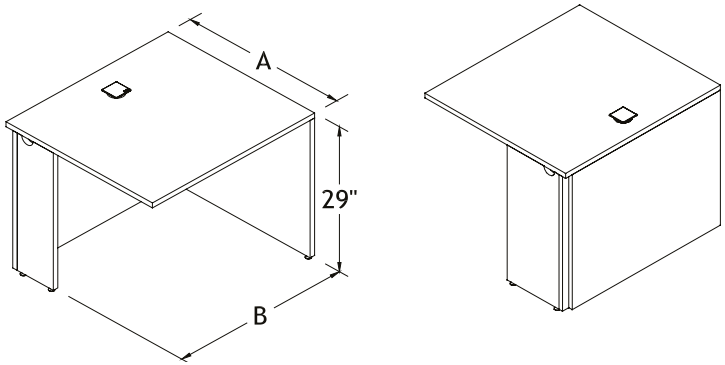

Direction

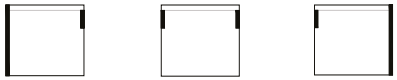

L Finished on left

C No finish *(between 2 desks)*

R Finished on right

Combination of Colors

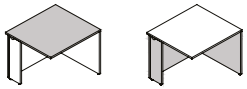

Top **Base**

Manufacturing Standards

- 1" top;
- Front panels made of high pressure laminate (HPL);
- Centered CCPF grommet;
- 3" aluminum finishing filler when there are 2 adjoining desks.

Fits with Spherical reception desks:
- 27" consulting desk fits with a 24" reception desk;
- 33" consulting desk fits with a 30" reception desk.

Installed Pedestal Option: *For available installed pedestals, see Work Desks starting on page 73.*

Options

Grommet Position

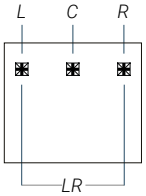

Grommet Style

ELPF $0

C_PF $28 ea.

Installed Pedestals

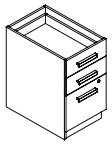

Specify installed pedestals, starting on p. 73

Prices

Dimensions A	B
27	36
33	36

1012	
1189	

How to Order

		option ($)	AB	option ($)		L C R	NGR GLR GRR GRL **GRC (std)**	ELPF CAPF CBPF CDPF **CCPF (std)**	**Combination of Colors** *See the Logiflex Color Chart (p. 11)*	
	RE				**SPH SC**					
	series	pedestal on left	dimensions	pedestal on right	product	direction	grommet position	grommet style	top	base
Example	**RE**	E	2736		**SPH SC**	L	GRC	CCPF	LL	W

Spheric - Straight Accessable Reception Desk

SPH SA

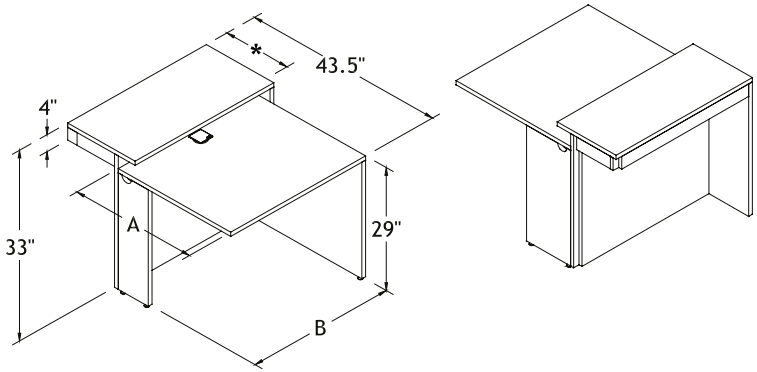

Direction

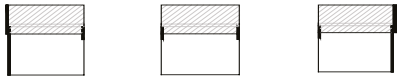

L Finished on left

C No finish *(between 2 desks)*

R Finished on right

Combination of Colors

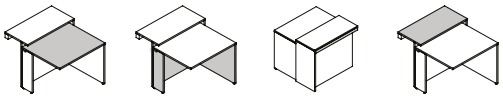

Top **Base** **Front** **Shelf**

Manufacturing Standards

- 1" top;
- Front panels made of high pressure laminate (HPL);
- Centered CCPF grommet;
- 3" aluminum finishing filler when there are 2 adjoining desks.

Transaction Tops:
For 24" tops, the transaction shelf is 12";
For 30" tops, the transaction shelf is 16".

Installed Pedestal Option: *For available installed pedestals, see Work Desks starting on page 73.*

Options

Grommet Position

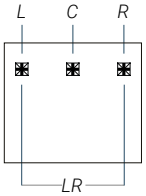

Grommet Style

ELPF $0

C_PF $28 ea.

Installed Pedestals

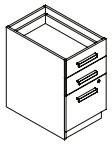

Specify installed pedestals, starting on p. 73

Prices

Dimensions A	B	
24	36	1815
30	36	1867

How to Order

		option ($)	AB	option ($)		L C R	NGR GLR GRR GRL **GRC (std)**	ELPF CAPF CBPF CDPF **CCPF (std)**	**Combination of Colors** *See the Logiflex Color Chart (p. 11)*			
	RE				**SPH SA**							
	series	pedestal on left	dimensions	pedestal on right	product	direction	grommet position	grommet style	top	base	front	shelf
Example	**RE**	E	2436		**SPH SA**	L	GRC	CCPF	LL	W	W	LL

Manhattan - Reception Desk

MAN

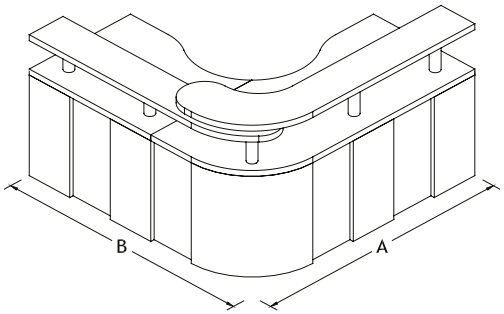

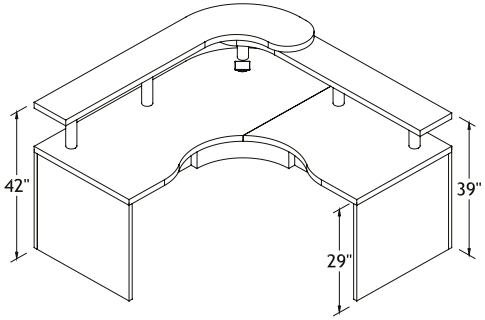

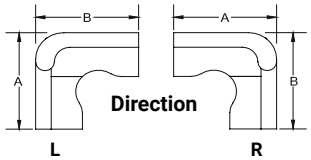

Combination of Colors

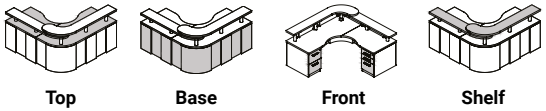

Manufacturing Standards

Reception Desk:

- 1-5/8" desk and shelf tops;
- Rounded corner front panel made of high pressure laminate (HPL);
- 2.5" diameter, Satin Nickel finish brackets;
- Centred CAPF grommet;
- Top depth: 30".

Acrylic Panel Option:

- 1/8" frosted acrylic panels polished on the visible sides.

Pedestals cannot be installed on reception stations that are 66" X 66" because of the curves close to the user space. We suggest mobile pedestals instead.

30" pedestals cannot be installed on reception stations that are less than 84" X 84" because of the curves close to the user space.

Options

Grommet Position

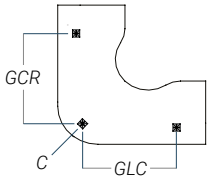

3 grommets (GR3)

Grommet Style

ELPF $0

C_PF $28 ea.

Installed Pedestals

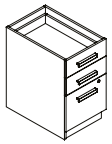

Specify installed pedestals, starting on p. 73

Acrylic Panels

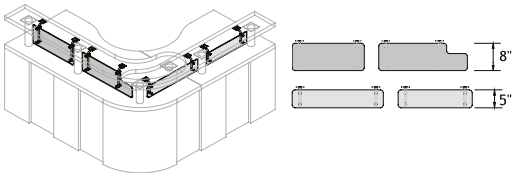

PL
$2 573

Prices

Dimensions A B	REC 1-5/8"	RECL 1-9/16"
66 66	7817	9823
72 72	8040	10067
78 78	8262	10311
84 84	8490	10608
96 96	8931	11082

How to Order

	REC RECL	option ($)	AB	option ($)		L R	NGR GLC GCR GR3 **GRC (std)**	ELPF CCPF CBPF CDPF **CAPF (std)**	PL	**Combination of Colors** *See the Logiflex Color Chart (p. 11)*			
					MAN								
	series	pedestal on left	dimensions	pedestal on right	product	direction	grommet position	grommet style	acrylic panel	top	base	front	shelf
Example	REC	E	7878		**MAN**	L	GRC	CAPF	PL	W	SW	SW	W

Reception C - Corner Counter with Straight Cut

CXT

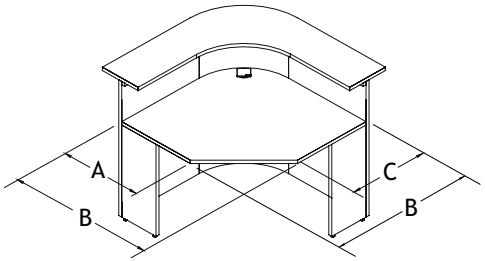

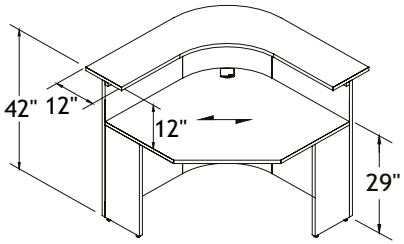

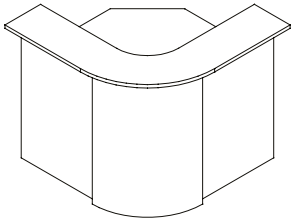

Direction

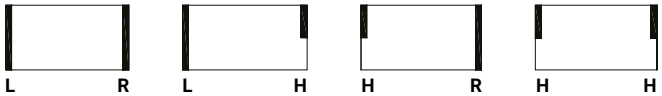

Full Legs | Half Leg on Right | Half Leg on Left | 2 Half Legs

Combination of Colors

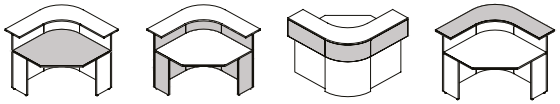

Top | Base | Front | Shelf

Manufacturing Standards

- Corner reception desk with straight keyboard space;
- Curved high pressure laminate panel at front of reception;
- 42"H transaction shelf;
- Corner CCPF grommet.

Vertical Panel (PV) option: *It is possible to add a 12"H vertical panel on the front of the reception, under the transaction shelf. The curved part is in high pressure laminate (HPL) but not the left and right vertical panels.*

Options

Grommet Position

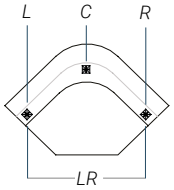

Grommet Style

ELPF $0 | C_PF $28 ea.

Vertical Panel

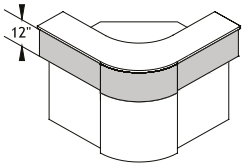

PV $1 077

How to Order

RE REL REC RECL	ABC	CXT	LR LH HR HH	NGR GRL GRR GLR **GRC (std)**	ELPF CAPF CBPF CDPF **CCPF (std)**	PV
series	dimensions	product	direction	grommet position	grommet style	vertical panel
Example RE	184218	**CXT**	LR	GRC	CCPF	PV

Combination of Colors
See the Logiflex Color Chart (p. 11)

top	base	front	shelf
W	W	W	W

Prices

Dimensions A B C	RE 1"	REL 1-1/16"	REC 1-5/8"	RECL 1-9/16"
18 36 18	4073	4810	4372	5040
18 42 18	4141	4974	4523	5279
24 42 24	4141	4974	4523	5279
24 48 24	4317	5281	4800	5665
30 48 30	4317	5281	4800	5665

Reception C - Corner Counter with Curved Cut

CXX

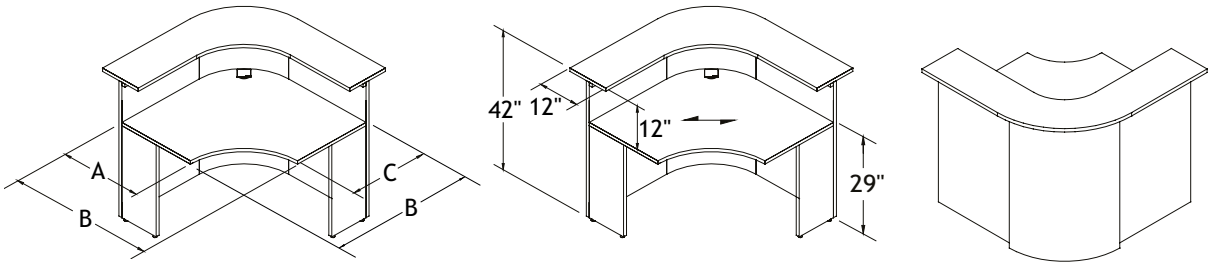

Direction

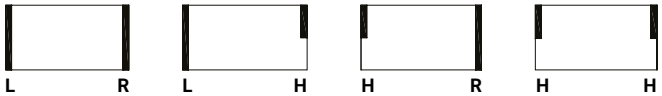

Full Legs | Half Leg on Right | Half Leg on Left | 2 Half Legs

Combination of Colors

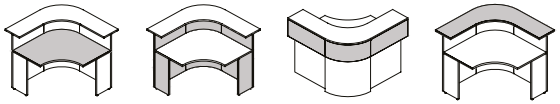

Top | Base | Front | Shelf

Manufacturing Standards

- Corner reception desk with curved keyboard space;
- Curved high pressure laminate panel at front of reception;
- 42"H transaction shelf;
- Corner CCPF grommet.

Vertical Panel (PV) option: *It is possible to add a 12"H vertical panel on the front of the reception, under the transaction shelf. The curved part is in high pressure laminate (HPL) but not the left and right vertical panels.*

Options

Grommet Position

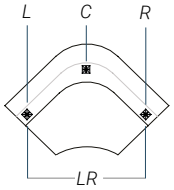

Grommet Style

ELPF $0 | C_PF $28 ea.

Vertical Panel

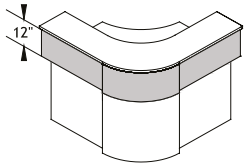

PV $1 077

Prices

Dimensions A B C	RE 1"	REL 1-1/16"	REC 1-5/8"	RECL 1-9/16"
18 42 18	4261	5113	4650	5416
24 42 24	4261	5113	4650	5416
24 48 24	4438	5423	4930	5805
30 48 30	4438	5423	4930	5805

How to Order

	RE REL REC RECL	ABC		LR LH HR HH	NGR GRL GRR GLR **GRC (std)**	ELPF CAPF CBPF CDPF **CCPF (std)**	PV	**Combination of Colors** *See the Logiflex Color Chart (p. 11)*			
			CXX								
	series	dimensions	product	direction	grommet position	grommet style	vertical panel	top	base	front	shelf
Example	RE	184218	**CXX**	LR	GRC	CCPF	PV	W	W	W	W

Reception C - Rectangular Reception Desk

CTB

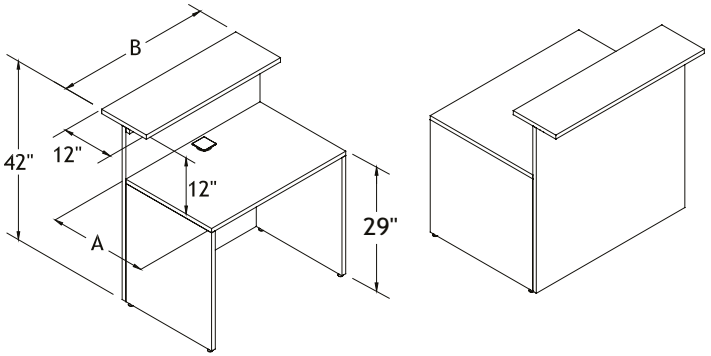

Direction

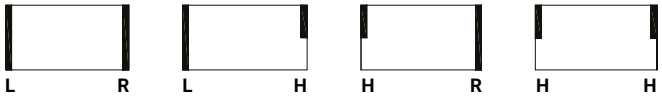

Full Legs | Half Leg on Right | Half Leg on Left | 2 Half Legs

Combination of Colors

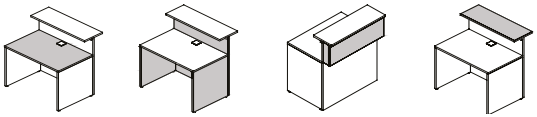

Top | Base | Front | Shelf

Manufacturing Standards

- Rectangular reception desk;
- 42"H transaction shelf;
- Centered CCPF grommet for desks less than 48", left and right grommets for desks of 48" and up.

Vertical Panel (PV) option: *It is possible to add a 12"H vertical laminate panel on the front of the reception, under the transaction shelf.*

Options

Grommet Position

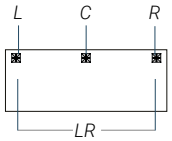

Grommet Style

ELPF $0 | C_PF $28 ea.

Installed Pedestals

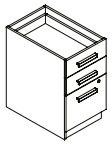

Specify installed pedestals, starting on p. 73

Vertical Panel

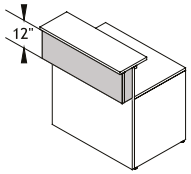

PV
$244

How to Order

RE REL REC RECL	option ($)	AB	option ($)		LR LH HR HH	NGR GRL GRR GLR **GRC (std)**	ELPF CAPF CBPF CDPF **CCPF (std)**	PV	**Combination of Colors** *See the Logiflex Color Chart (p. 11)*			
				CTB								
series	pedestal on left	dimensions	pedestal on right	product	direction	grommet position	grommet style	vertical panel	top	base	front	shelf
Example RE	E	2460		**CTB**	LR	GRC	CCPF	PV	W	W	W	W

Prices

Dimensions A B	RE 1"	REL 1-1/16"	REC 1-5/8"	RECL 1-9/16"
18 36	1024	1324	1205	1497
18 42	1071	1403	1273	1576
18 48	1115	1466	1336	1675
18 54	1225	1590	1446	1879
18 60	1303	1717	1559	1918
24 36	1077	1414	1288	1589
24 42	1136	1503	1367	1698
24 48	1224	1632	1482	1854
24 54	1313	1749	1593	2031
24 60	1368	1851	1683	2099
30 36	1136	1504	1368	1681
30 42	1202	1604	1458	1822
30 48	1337	1792	1635	2031
30 54	1404	1910	1735	2188
30 60	1434	1990	1809	2285

Reception C - Left Reception Return with Corner Cut on Right

LCTTB

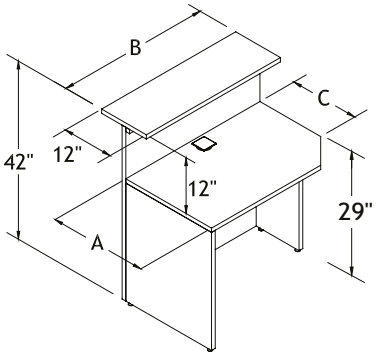

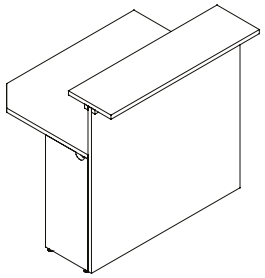

Direction

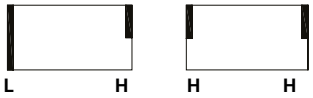

Half Leg on Right — 2 Half Legs

Combination of Colors

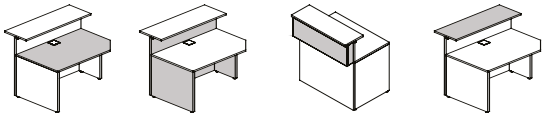

Top **Base** **Front** **Shelf**

Manufacturing Standards

- Left reception return with corner cut on right;
- 42"H transaction shelf;
- Centered CCPF grommet for desks less than 48", left and right grommets for desks of 48" and up.

Vertical Panel (PV) option: *It is possible to add a 12"H vertical laminate panel on the front of the reception, under the transaction shelf.*

Options

Grommet Position

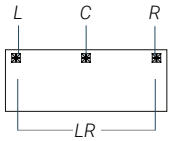

Grommet Style

ELPF $0 — C_PF $28 ea.

Installed Pedestals

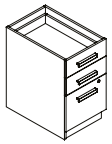

Specify installed pedestals, starting on p. 73

Vertical Panel

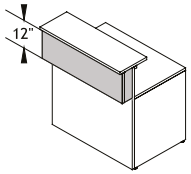

PV
$244

How to Order

	RE REL REC RECL	option ($)	ABC		LH HH	NGR GRL GRR GLR **GRC (std)**	ELPF CAPF CBPF CDPF **CCPF (std)**	PV	**Combination of Colors** *See the Logiflex Color Chart (p. 11)*			
				LCTTB								
	series	pedestal on left	dimensions	product	direction	grommet position	grommet style	vertical panel	top	base	front	shelf
Example	RE	E	246018	**LCTTB**	LH	GRC	CCPF	PV	W	W	W	W

Prices

Dimensions A B C	RE 1"	REL 1-1/16"	REC 1-5/8"	RECL 1-9/16"
24 36 18	1147	1492	1354	1666
24 42 18	1205	1581	1435	1776
24 48 18	1293	1707	1552	1929
24 54 18	1384	1825	1660	2108
24 60 18	1436	1927	1751	2175
30 36 24	1205	1583	1436	1762
30 42 24	1268	1669	1517	1900
30 48 24	1404	1872	1702	2108
30 54 24	1473	1990	1809	2264
30 60 24	1504	2063	1877	2358
36 36 30	1339	1752	1594	1900
36 42 30	1414	1882	1711	2095
36 48 30	1494	2015	1833	2290
36 54 30	1571	2148	1953	2456
36 60 30	1619	2234	2031	2572

Reception C - Right Reception Return with Corner Cut on Left

RCTTB

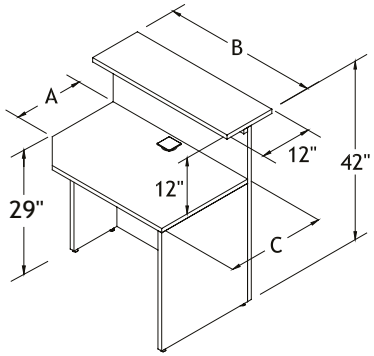

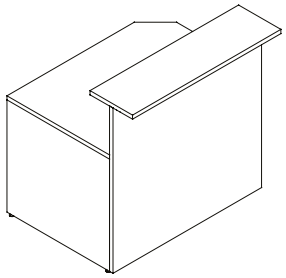

Direction

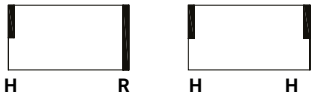

Half Leg on Left 2 Half Legs

Combination of Colors

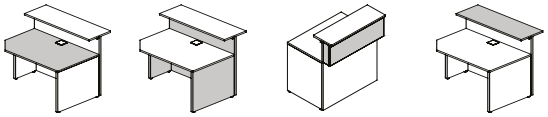

Top **Base** **Front** **Shelf**

Manufacturing Standards

- Right reception return with corner cut on left;
- 42" high transaction shelf;
- Centered CCPF grommet for desks less than 48", left and right grommets for desks of 48" and up.

Vertical Panel (PV) option: *It is possible to add a 12"H vertical laminate panel on the front of the reception, under the transaction shelf.*

Options

Grommet Position

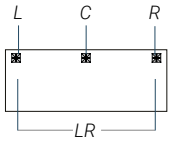

Grommet Style

ELPF $0 C_PF $28 ea.

Installed Pedestals

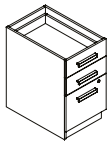

Specify installed pedestals, starting on p. 73

Vertical Panel

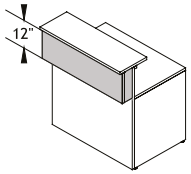

PV
$244

How to Order

	RE REL REC RECL	ABC	option ($)		HR HH	NGR GRL GRR GLR **GRC (std)**	ELPF CAPF CBPF CDPF **CCPF (std)**	PV	**Combination of Colors** *See the Logiflex Color Chart (p. 11)*			
				RCTTB								
	series	dimensions	pedestal on right	product	direction	grommet position	grommet style	vertical panel	top	base	front	shelf
Example	RE	186024	E	**RCTTB**	HR	GRC	CCPF	PV	W	W	W	W

Prices

Dimensions A B C	RE 1"	REL 1-1/16"	REC 1-5/8"	RECL 1-9/16"
18 36 24	1147	1492	1354	1666
18 42 24	1205	1581	1435	1776
18 48 24	1293	1707	1552	1929
18 54 24	1384	1825	1660	2108
18 60 24	1436	1927	1751	2175
24 36 30	1205	1583	1436	1762
24 42 30	1268	1669	1517	1900
24 48 30	1404	1872	1702	2108
24 54 30	1473	1990	1809	2264
24 60 30	1504	2063	1877	2358
30 36 36	1339	1752	1594	1900
30 42 36	1414	1882	1711	2095
30 48 36	1494	2015	1833	2290
30 54 36	1571	2148	1953	2456
30 60 36	1619	2234	2031	2572

Reception C - Left Reception Return with Curved Cut on Right

LCVTB

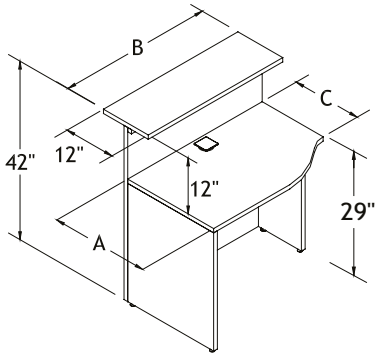

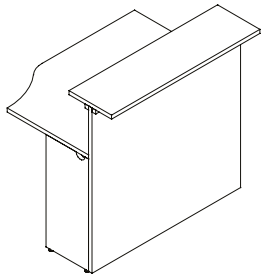

Direction

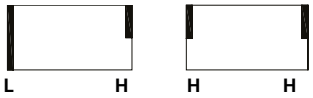

Half Leg on Right — 2 Half Legs

Combination of Colors

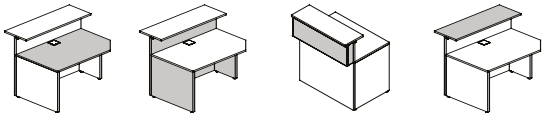

Top **Base** **Front** **Shelf**

Manufacturing Standards

- Left reception return with curved cut on right;
- 42"H transaction shelf;
- Centered CCPF grommet for desks less than 48", left and right grommets for desks of 48" and up.

Vertical Panel (PV) option: *It is possible to add a 12"H vertical laminate panel on the front of the reception, under the transaction shelf.*

Options

Grommet Position

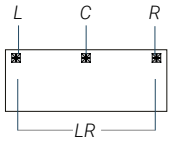

Grommet Style

ELPF $0 — C_PF $28 ea.

Installed Pedestals

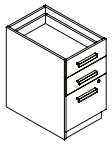

Specify installed pedestals, starting on p. 73

Vertical Panel

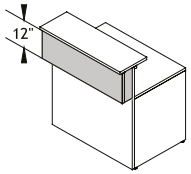

PV
$244

How to Order

	RE REL REC RECL	option ($)	ABC		LH HH	NGR GRL GRR GLR **GRC (std)**	ELPF CAPF CBPF CDPF **CCPF (std)**	PV	**Combination of Colors** *See the Logiflex Color Chart (p. 11)*			
				LCVTB								
	series	pedestal on left	dimensions	product	direction	grommet position	grommet style	vertical panel	top	base	front	shelf
Example	RE	E	246018	**LCVTB**	LH	GRC	CCPF	PV	W	W	W	W

Prices

Dimensions A B C	RE 1"	REL 1-1/16"	REC 1-5/8"	RECL 1-9/16"
24 36 18	1147	1492	1354	1666
24 42 18	1205	1581	1435	1776
24 48 18	1293	1707	1552	1929
24 54 18	1384	1825	1660	2108
24 60 18	1436	1927	1751	2175
30 36 24	1205	1583	1436	1762
30 42 24	1268	1669	1517	1900
30 48 24	1404	1872	1702	2108
30 54 24	1473	1990	1809	2264
30 60 24	1504	2063	1877	2358
36 36 30	1339	1752	1594	1900
36 42 30	1414	1882	1711	2095
36 48 30	1494	2015	1833	2290
36 54 30	1571	2148	1953	2456
36 60 30	1619	2234	2031	2572

Reception C - Right Reception Return with Curved Cut on Left

RCVTB

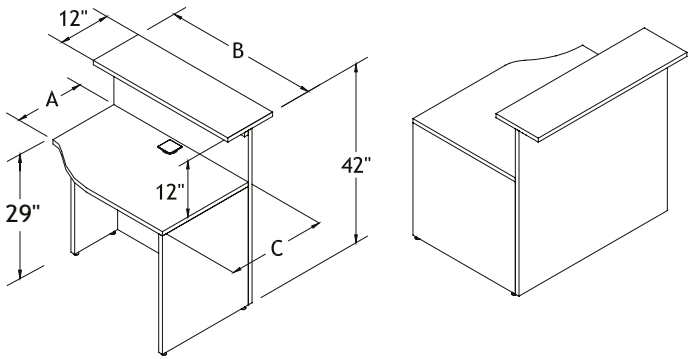

Direction

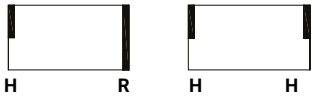

Half Leg on Left — 2 Half Legs

Combination of Colors

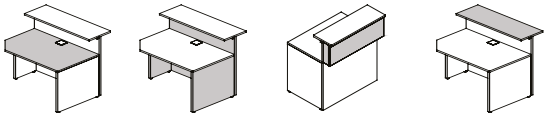

Top **Base** **Front** **Shelf**

Manufacturing Standards

- Right reception return with curved cut on left;
- 42" high transaction shelf;
- Centered CCPF grommet for desks less than 48", left and right grommets for desks of 48" and up.

Vertical Panel (PV) option: *It is possible to add a 12"H vertical laminate panel on the front of the reception, under the transaction shelf.*

Options

Grommet Position

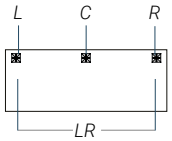

Grommet Style

ELPF $0 — C_PF $28 ea.

Installed Pedestals

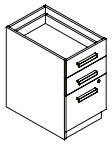

Specify installed pedestals, starting on p. 73

Vertical Panel

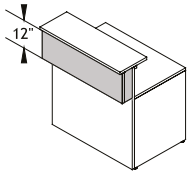

PV
$244

Prices

Dimensions A B C	RE 1"	REL 1-1/16"	REC 1-5/8"	RECL 1-9/16"
18 36 24	1147	1492	1354	1666
18 42 24	1205	1581	1435	1776
18 48 24	1293	1707	1552	1929
18 54 24	1384	1825	1660	2108
18 60 24	1436	1927	1751	2175
24 36 30	1205	1583	1436	1762
24 42 30	1268	1669	1517	1900
24 48 30	1404	1872	1702	2108
24 54 30	1473	1990	1809	2264
24 60 30	1504	2063	1877	2358
30 36 36	1339	1752	1594	1900
30 42 36	1414	1882	1711	2095
30 48 36	1494	2015	1833	2290
30 54 36	1571	2148	1953	2456
30 60 36	1619	2234	2031	2572

How to Order

	RE REL REC RECL	ABC	option ($)		HR HH	NGR GRL GRR GLR **GRC (std)**	ELPF CAPF CBPF CDPF **CCPF (std)**	PV	**Combination of Colors** *See the Logiflex Color Chart (p. 11)*			
				RCVTB								
	series	dimensions	pedestal on right	product	direction	grommet position	grommet style	vertical panel	top	base	front	shelf
Example	RE	186024	E	**RCVTB**	HR	GRC	CCPF	PV	W	W	W	W

Work Desks

Lateral Tables

TL

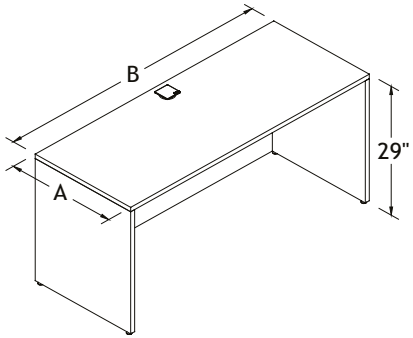

Leg Bases

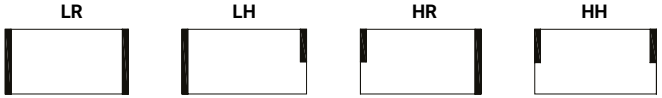

LR	LH	HR	HH
L R	L H	H R	H H
Full Legs	Half Leg on Right	Half Leg on Left	Half Legs

Combination of Colors

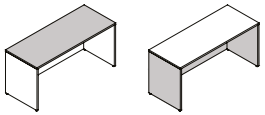

Manufacturing Standards

- 1" thick laminate top and legs;
- Centered CCPF grommet;
- Flush modesty.

Modesties: *If choice of modesty is not specified, the standard (FM) will be used, PM modesties are available at no extra charge.*

Options

Modesty

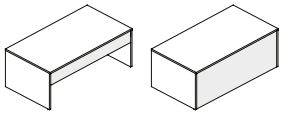

10" high	Full height
PM	FM
$0	$0

Grommet Position

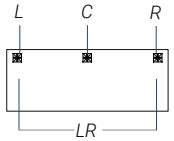

Grommet Style

ELPF	C_PF
$0	$28 ea.

Prices

Dimensions A B	RE 1"	REL 1-1/16"	REC 1-5/8"	RECL 1-9/16"
24 30	680	846	766	951
24 36	735	927	842	1055
24 42	766	981	891	1129
24 48	814	1051	954	1221
24 54	829	1089	991	1280
24 60	865	1147	1041	1359
24 66	901	1207	1096	1441
24 72	933	1262	1145	1518
24 78	964	1314	1196	1592

How to Order

	RE REL REC RECL	AB		LH HR HH **LR (std)**	PM **FM (std)**	NGR GRL GRR GLR **GRC (std)**	ELPF CAPF CBPF CDPF **CCPF (std)**	**Combination of Colors** *See the Logiflex Color Chart (p. 11)*		
			TL							
	series	dimensions	product	direction	modesty	grommet position	grommet style	top	base	front
Example	RE	2472	**TL**	LR	PM	GRC	CCPF	SW	W	SW

Returns

L29

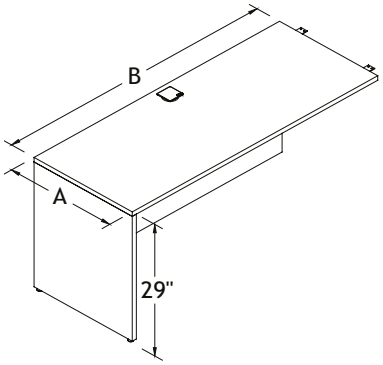

R29

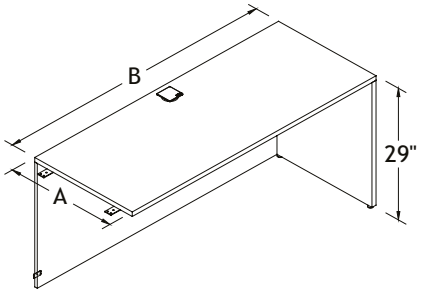

Manufacturing Standards

- 1" thick laminate top and legs;
- Centered CCPF grommet;
- Flush plates;
- Flush modesty;
- Height: 29".

Modesties: *If choice of modesty is not specified, the standard (FM) will be used, PM modesties are available at no extra charge.*

Combination of Colors

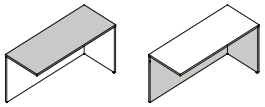

Top **Base**

Options

Modesty

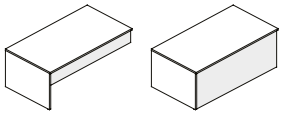

10" high — PM — $0

Full height — FM — $0

Grommet Position

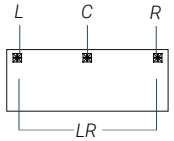

Grommet Style

ELPF — $0

C_PF — $28 ea.

Installed Pedestals

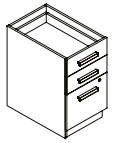

Specify installed pedestals, starting on p. 73

How to Order

	RE REL REC RECL	AB	option ($)	L29 R29	PM **FM (std)**	NGR GRL GRR GLR **GRC (std)**	ELPF CAPF CBPF CDPF **CCPF (std)**	**Combination of Colors** *See the Logiflex Color Chart (p. 11)*		
	series	dimensions	pedestal	product	modesty	grommet position	grommet style	top	base	front
Example	RE	2448	E	L29	PM	GRC	CCPF	SW	W	SW

Prices

Dimensions A B	RE 1"	REL 1-1/16"	REC 1-5/8"	RECL 1-9/16"
24 30	639	802	729	906
24 36	665	851	773	977
24 42	689	897	815	1044
24 48	723	954	866	1125
24 54	766	1020	928	1213
24 60	814	1089	991	1304

Work Desks

Left Extended Corner Tables

S L

Straight Cut

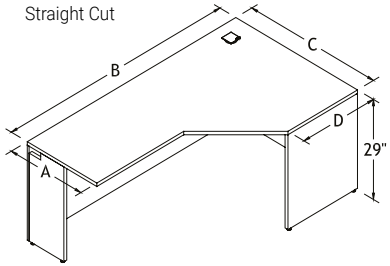

A L

Curved Cut

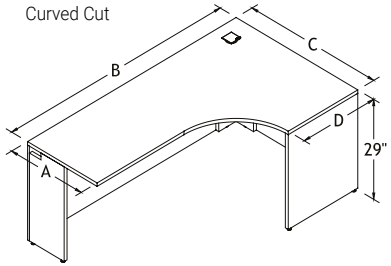

Modesties

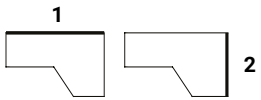

Leg Bases

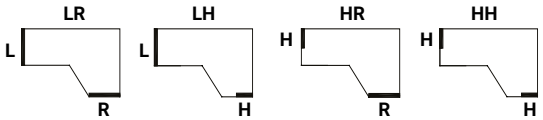

Full Legs | Half Leg on Right | Half Leg on Left | Half Legs

Combination of Colors

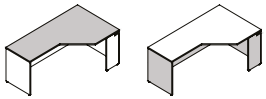

Top | **Base**

Manufacturing Standards

- Delivered disassembled;
- 1" thick laminate top and legs;
- Corner CCPF grommet;
- Flush modesty.

Modesties: *If choice of modesty is not specified, the standard (FM) will be used, PM modesties are available at no extra charge.*

Installed Pedestal Option: *The pedestal will be installed on the extended side of the desks (on left).*

Options

Modesty

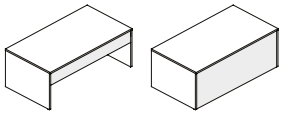

10" high — PM — $0

Full height — FM — $0

Grommet Position

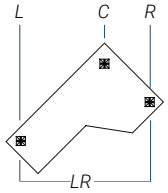

Grommet Style

ELPF — $0

C_PF — $28 ea.

Prices

Dimensions A B C D	RE 1"	REL 1-1/16"	REC 1-5/8"	RECL 1-9/16"
24 60 42 24	1522	2018	1835	2390
24 66 42 24	1579	2118	1923	2528
24 72 42 24	1667	2244	2041	2693
24 78 42 24	1755	2376	2161	2861

How to Order

	RE REL REC RECL	ABCD	S A		LH HR HH **LR (std)**	PM **FM (std)**	PM **FM (std)**	NGR GRL GRR GLR **GRC (std)**	ELPF CAPF CBPF CDPF **CCPF (std)**	**Combination of Colors** *See the Logiflex Color Chart (p. 11)*		
				L								
	series	dimensions	product	direction	direction	modesty 1	modesty 2	grommet position	grommet style	top	base	front
Example	RE	24724224	A	**L**	LR	PM	PM	GRC	CCPF	SW	W	SW

Right Extended Corner Tables

S R

Straight Cut

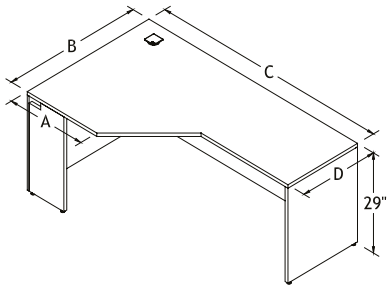

A R

Curved Cut

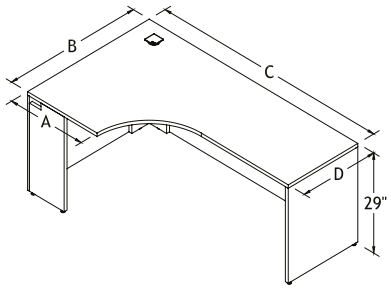

Manufacturing Standards

- Delivered disassembled;
- 1" thick laminate top and legs;
- Corner CCPF grommet;
- Flush modesty.

Modesties: *If choice of modesty is not specified, the standard (FM) will be used, PM modesties are available at no extra charge.*

Installed Pedestal Option: *The pedestal will be installed on the extended side of the desks (on right).*

Modesties

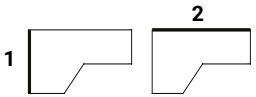

Leg Bases

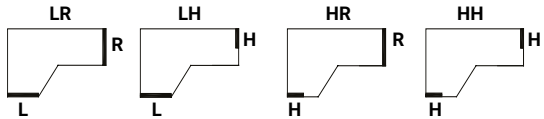

Full Legs | Half Leg on Right | Half Leg on Left | Half Legs

Combination of Colors

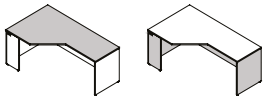

Top | **Base**

Options

Modesty

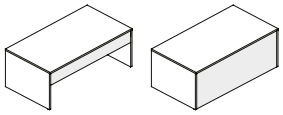

10" high — PM — $0

Full height — FM — $0

Grommet Position

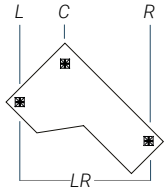

Grommet Style

ELPF — $0

C_PF — $28 ea.

Prices

Dimensions A B C D	RE 1"	REL 1-1/16"	REC 1-5/8"	RECL 1-9/16"
24 42 60 24	1522	2018	1835	2390
24 42 66 24	1579	2118	1923	2528
24 42 72 24	1667	2244	2041	2693
24 42 78 24	1755	2376	2161	2861

How to Order

	RE REL REC RECL	ABCD	S A		LH HR HH **LR (std)**	PM **FM (std)**	PM **FM (std)**	NGR GRL GRR GLR **GRC (std)**	ELPF CAPF CBPF CDPF **CCPF (std)**	**Combination of Colors** *See the Logiflex Color Chart (p. 11)*		
				R								
	series	dimensions	product	direction	direction	modesty 1	modesty 2	grommet position	grommet style	top	base	front
Example	RE	24427224	A	**R**	LR	PM	PM	GRC	CCPF	SW	W	SW

Storage Furniture

Installed Pedestals

D

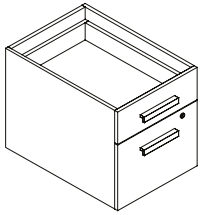

E

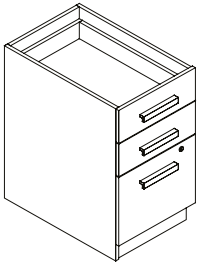

F

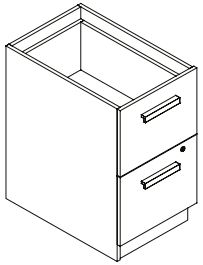

Manufacturing Standards

- Factory installed pedestals without tops;
- D = 1 utility drawer and 1 file drawer;
- E = 2 utility drawers and 1 file drawer;
- F = 2 file drawers;
- H052CHR or H052SN handles according to collection;
- Satin nickel lock.

Width : Letter size -15-3/4"
Width : Legal size - 18-3/4"

Depth is adjusted to match furniture ordered.

How to Order:
Add the pedestal code desired to the desk code on which it has to be installed following the "How to Order" instructions on the desk page.

Handles: *For handles other than H052, please choose from the Logiflex list at no extra charge.*

Prices

Code	Front Finish Std
D	742
DX	861
E	1011
EX	1133
F	985
FX	1107

Options

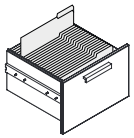

Legal Size

X

Installed Pedestals

CBCL30

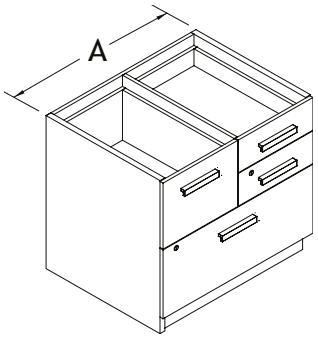

BCCL30

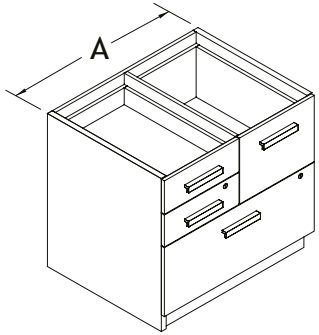

CL30

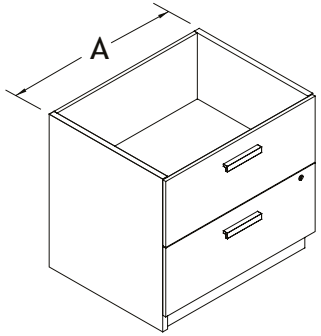

Manufacturing Standards

- Factory installed pedestals without tops;
- CBCL/BCCL= 2 utility drawers, 1 file drawer and 1 lateral file drawer;
- CL= 2 lateral file drawers;
- H052CHR or H052SN handles according to collection;
- Satin nickel lock.

Depth is adjusted to match furniture ordered.

How to Order:
Add the pedestal code desired to the desk code on which it has to be installed following the "How to Order" instructions on the desk page.

Handles: *For handles other than H052, please choose from the Logiflex list at no extra charge.*

Prices

CBCL30/BCCL30

Code	Front Finish Std
CBCL30	1629
BCCL30	1629

CL30

Code	Front Finish Std
CL30	1122

Mobile E and F Pedestals - Letter Size

MOBE

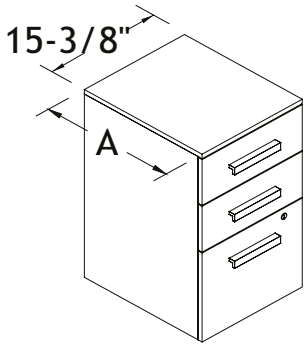

MOBF

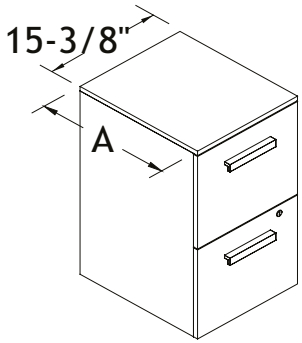

Manufacturing Standards

- Delivered with the casters disassembled;
- E = 2 utility drawers and 1 letter size file drawer;
- F = 2 letter size file drawers;
- H052CHR handles;
- Satin nickel lock;
- 5 casters (not visible);
- Height: 27-3/8".

Handles: *For handles other than H052CHR standard, please choose from the Logiflex list at no extra charge.*

Counterweight: *A 45 lb counterweight is included for pedestals that are 18" deep.*

Combination of Colors

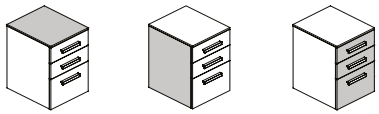

Top **Base** **Front**

Prices

Dimensions A	Code	Front Finish Std
18	MOBE	1118
23	MOBE	1118
18	MOBF	1093
23	MOBF	1093

How to Order

	series	dimensions	code	pedestal	top	base	front
	RE	A	MOB	E F	Combination of Colors *See the Logiflex Color Chart (p. 11)*		
Example	RE	18	MOB	E	W	W	SW

Mobile E and F Pedestals - Legal Size

MOBXE

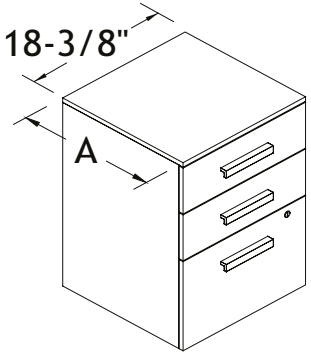

MOBXF

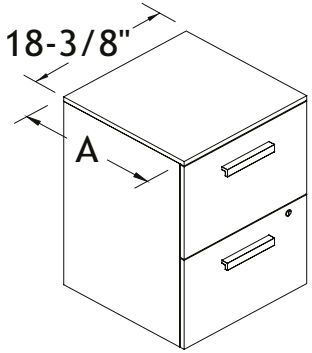

Manufacturing Standards

- Delivered with the casters disassembled;
- E = 2 utility drawers and 1 legal size file drawer;
- F = 2 legal size file drawers;
- H052CHR handles;
- Satin nickel lock;
- 5 casters (not visible);
- Height: 27-3/8".

Handles: *For handles other than H052CHR standard, please choose from the Logiflex list at no extra charge.*

Counterweight: *A 45 lb counterweight is included for pedestals that are 18" deep.*

Prices

Dimensions A	Code	Front Finish Std
18	MOBXE	1248
23	MOBXE	1248
18	MOBXF	1223
23	MOBXF	1223

Combination of Colors

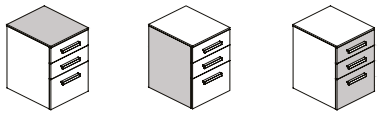

Top **Base** **Front**

How to Order

	series	dimensions	code	pedestal	top	base	front
	RE	A	MOBX	E F	Combination of Colors *See the Logiflex Color Chart (p. 11)*		
Example	RE	18	MOBX	E	W	W	SW

Lateral File Cabinets

CL2

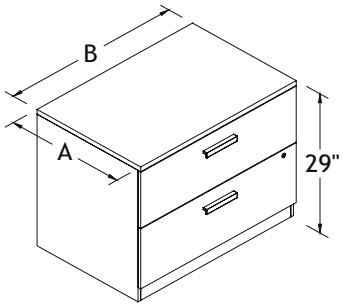

CL3

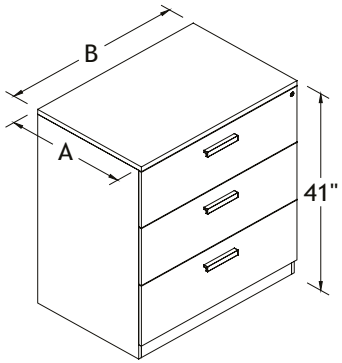

CL4

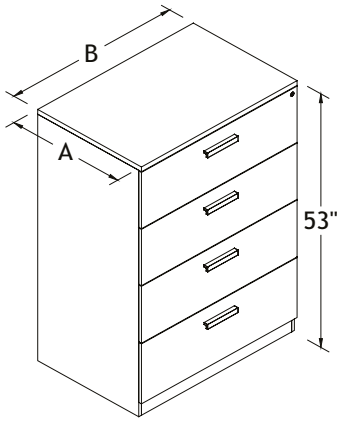

Manufacturing Standards

- 2, 3 or 4 legal size lateral filing drawers;
- H052CHR handles;
- Satin nickel locks;
- Crossbars;
- Counterweight (CL2 only).

Handles: *For handles other than H052CHR standard, please choose from the Logiflex list at no extra charge.*

Combination of Colors

Top **Base** **Front**

Prices

CL2 - 2 lateral filing drawers

Dimensions A	B	Front Finish Std
24	30	1389
24	36	1496

CL3 - 3 lateral filing drawers

Dimensions A	B	Front Finish Std
24	30	2068
24	36	2163

CL4 - 4 lateral filing drawers

Dimensions A	B	Front Finish Std
24	30	2698
24	36	2815

How to Order

	series	dimensions	code	drawers	top	base	front
	RE	AB	CL	2 3 4	Combination of Colors *See the Logiflex Color Chart (p. 11)*		
Example	RE	2436	CL	3	W	W	SW

Multiple Units

UC1

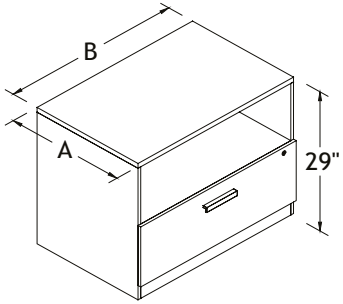

UC2

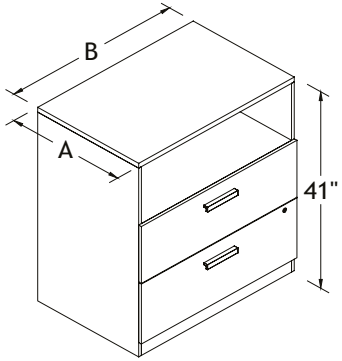

UC3

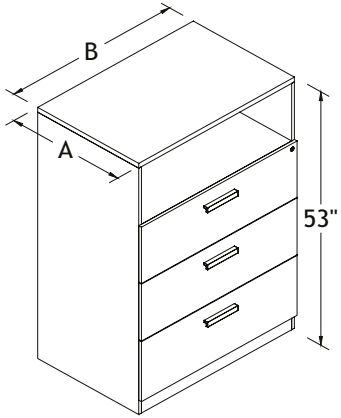

Manufacturing Standards

- Open storage with 11" interior height;
- 1, 2 or 3lateral filing drawers;
- H052CHR handles;
- Counterweight (UC1 and UC2)
- Satin nickel lock.

Handles: *For handles other than H052CHR standard, please choose from the Logiflex list at no extra charge.*

Combination of Colors

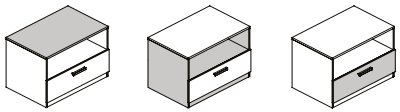

Top **Base** **Front**

Prices

UC1 - 1 open storage, 1 lateral filing drawer

Dimensions A	B	Front Finish Std
24	30	1309
24	36	1361

UC2 - 1 open storage, 2 lateral filing drawers

Dimensions A	B	Front Finish Std
24	30	1917
24	36	2014

UC3 - 1 open storage, 3 lateral filing drawers

Dimensions A	B	Front Finish Std
24	30	2450
24	36	2593

How to Order

	series	dimensions (AB)	code	drawers (1 2 3)	top	base	front
	RE		UC				
Example	RE	2436	UC	2	W	W	SW

Combination of Colors
See the Logiflex Color Chart (p. 11)

Cabinets with 2 Laminate Doors

AR

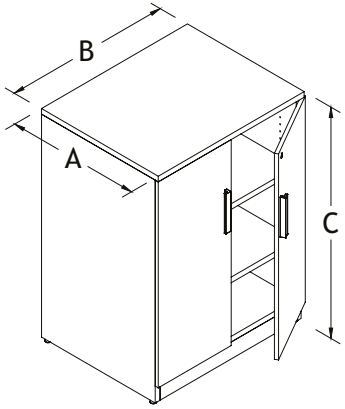

Combination of Colors

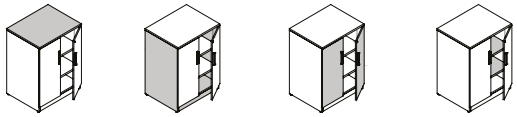

Top **Base** **Front** **Shelf**

Manufacturing Standards

- 2 laminate doors;
- H052CHR handles;
- Satin nickel lock;
- Adjustable shelves;
- Shelf brackets;
- 5/8" laminate back.

Adjustable Shelves:
29" high: 1 adjustable shelf;
41" high: 2 adjustable shelves;
53" high: 3 adjustable shelves.

Handles: *For handles other than H052CHR standard, please choose from the Logiflex list at no extra charge.*

Additional adjustable shelves (SH): *see Appendix D for prices, p. 13*

Options

Adjustable Shelves

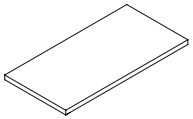

SH

Prices

Dimensions A B C	Front Finish Std
24 30 29	1170
24 36 29	1246
24 30 41	1392
24 36 41	1468
24 30 53	1614
24 36 53	1692

How to Order

	ABC			Combination of Colors (See the Logiflex Color Chart (p. 11))			
	RE		AR				
	series	dimensions	code	top	base	front	shelf
Example	RE	243641	AR	W	W	SW	W

Cabinets with 2 Glass Doors

AR - Glass Doors

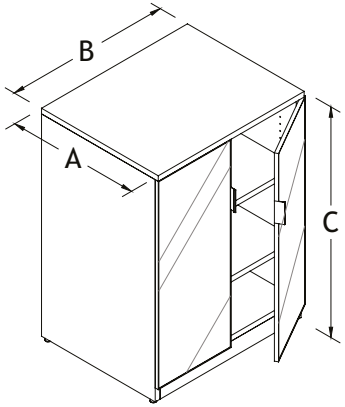

Combination of Colors

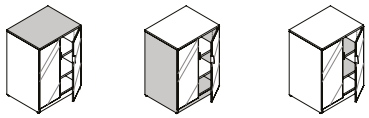

Top **Base** **Shelf**

Manufacturing Standards

- Aluminum-frame doors with white glass (V4) and built-in aluminum handles;
- Soft-close doors;
- Adjustable shelves;
- Shelf brackets;
- 5/8" laminate back.

Adjustable Shelves:
29" high: 1 adjustable shelf;
41" high: 2 adjustable shelves;
53" high: 3 adjustable shelves.

Glass: *If the choice of glass is not specified, the standard is white glass (V4). For other choices of glass, consult the Logiflex color chart.*

Additional adjustable shelves (SH): *see Appendix D for prices, p. 13*

Options

Adjustable Shelves

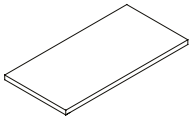

SH

Prices

Dimensions A B C	
24 30 29	2323
24 36 29	2500
24 30 41	2811
24 36 41	3046
24 30 53	3472
24 36 53	3766

How to Order

	series	dimensions (ABC)	code	glass (p. 11) (VS, PL, **V4 (std)**)	top	base	shelf
	RE		**AR**				
Example	**RE**	243641	**AR**	V4	W	W	W

Combination of Colors *See the Logiflex Color Chart (p. 11)*

Pigeonhole Units

PG

Letter Size

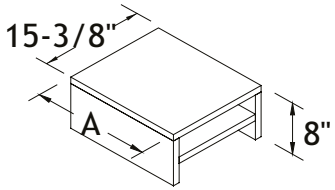

PGX

Legal Size

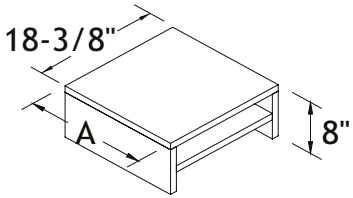

Manufacturing Standards

- 3" interior height in each pigeonhole;
- Frame is 1" laminate;
- Shelf and back 5/8" laminate.

Combination of Colors

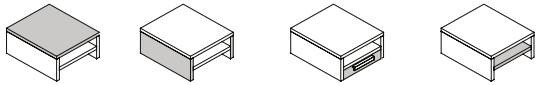

Top **Base** **Front** **Shelf**

Options

Drawer

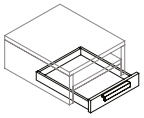

DR
$342

Prices

Dimensions A	Code
16 PG	502
16 PGX	524

How to Order

		A	PG PGX	DR	Combination of Colors *See the Logiflex Color Chart (p. 11)*			
	RE	**16**						
	series	dimensions	code	drawer	top	base	front	shelf
Example	**RE**	**16**	PG	DR	SW	SW	W-H	SW

Pigeonhole Units

PG30

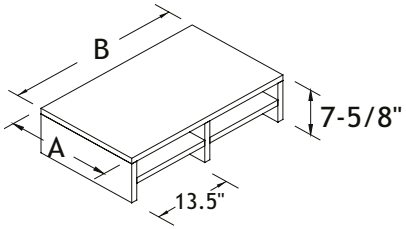

PG36

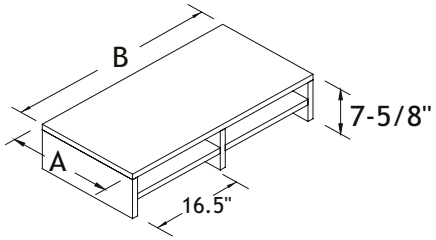

Combination of Colors

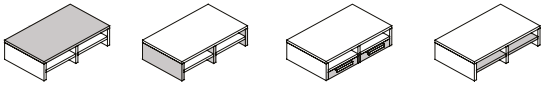

Top **Base** **Front** **Shelf**

Manufacturing Standards

- 3" interior height in each pigeonhole;
- Frame is 1" laminate;
- Shelf and back 5/8" laminate.

Options

Drawer

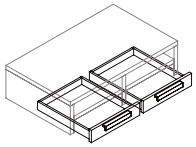

DR
$684

Prices

Dimensions A	B
16	30
16	36

865
905

How to Order

	A		B	DR	Combination of Colors *See the Logiflex Color Chart (p. 11)*			
RE	16	PG						
series	dimensions	code	dimensions	drawer	top	base	front	shelf
Example RE	16	PG	30	DR	SW	SW	W-H	SW

Vertical Pigeonhole Units

PGV

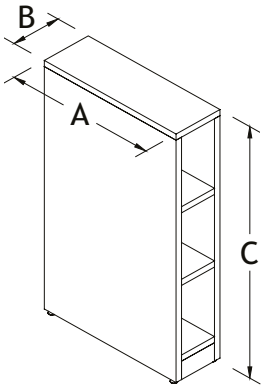

Manufacturing Standards

- On levelers;
- Frame is 1" laminate;
- 2 fixed shelves 1" laminate;
- Back 5/8" laminate.

Prices

Dimensions A	B	C	
24	08	41	860

Combination of Colors

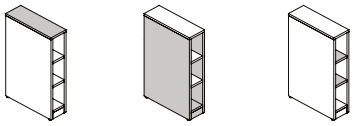

How to Order

	ABC			Combination of Colors *See the Logiflex Color Chart (p. 11)*		
	RE		**PGV**			
	series	dimensions	code	top	base	shelf
Example	**RE**	240841	**PGV**	SW	SW	W

Accessories

Handles

HJA

Handle

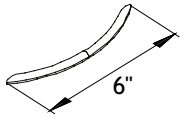

- 6" metal handle;
- 5-1/32" (128mm) center to center.

Code	$	Description
HJA	15	*Satin Nickel*
HJAB	15	*Black*

H011

Handle

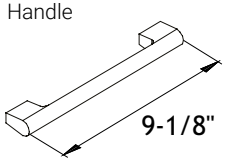

- 9-1/8" metal handle;
- 8-13/16" (224mm) center to center.

Code	$	Description
H011	15	*Satin Nickel*

H051

Handle

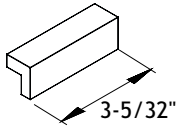

- 3-5/32" metal handle;
- 2-17/32" (64mm) center to center.

Code	$	Description
H051CHR	15	*Chrome*
H051SN	15	*Satin Nickel*
H051BL	15	*Black*
H051WH	15	*White*

H052

Handle

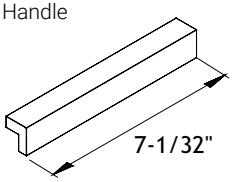

- 7-1/32" metal handle;
- 6-9/32" (160mm) center to center.

Code	$	Description
H052CHR	15	*Chrome*
H052SN	15	*Satin Nickel*
H052BL	15	*Black*
H052WH	15	*White*

H060

Handle

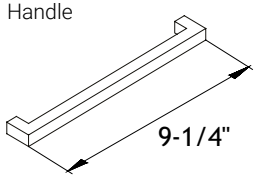

- 9-1/4" metal handle;
- 8-3/4" (222.25mm) center to center.

Code	$	Description
H060BN	15	*Brushed Nickel*
H060CHR	15	*Chrome*

H070

Handle

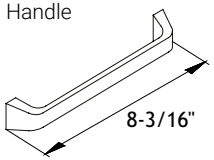

- 8-3/16" metal handle;
- 7-1/2" (190.5mm) center to center.

Code	$	Description
H070BN	15	*Brushed Nickel*
H070CHR	15	*Chrome*

H071

Handle

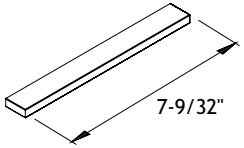

- 7-9/32" metal handle;
- 6-5/16" (160.338mm) center to center.

Code	$	Description
H071CHR	15	*Chrome*
H071BN	15	*Brushed Nickel*
H071BL	15	*Black*
H071WH	15	*White*

H072

Handle

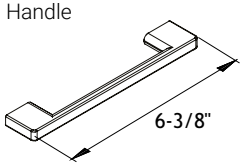

- 6-3/8" metal handle;
- 5-1/32" (127.8mm) center to center.

Code	$	Description
H072CHR	15	*Chrome*
H072BL	15	*Black*
H072WH	15	*White*

SXP002

Handle

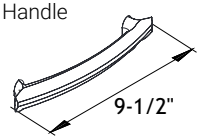

- 9-1/2" metal handle;
- 7-9/16" (192mm) center to center.

Code	$	Description
SXP002	15	*Satin Nickel*

SXP003

Handle

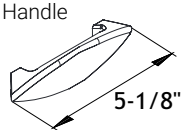

- 5-1/8" metal handle;
- 3-25/32" (96mm) center to center.

Code	$	Description
SXP003	15	*Satin Nickel*

Lighting

INT TOM

Touch Dimmer Switch

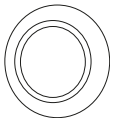

- Touch dimmer switch in aluminum finish with light ring.

Code	$	Description
INT TOM	337	

NDP02475

Power Supply

- 1x power supply to connect up to 20';
- 75W ultra-slim 24V LED power supply;
- 39" primary power cord and 38" secondary cord for connection to the LED light.

Code	$	Description
NDP02475	305	

DELCOB 4000

Micro 24 LED Strip

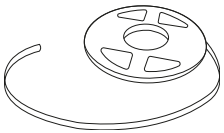

- 24V flexible LED adhesive strip;
- Neutral white;
- Length : 196";
- Allow 72 hours once the tape is applied before turning the light on;

Code	$	Description
DELCOB 4000	158	

DELKLIPU

5-1/2" Joint

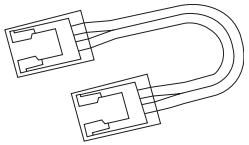

- Straight connector for linking two strip ends;
- Length : 5-1/2".

Code	$	Description
DELKLIPU	47	

DELKLIP

Straight Connector

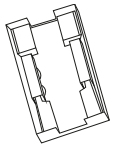

- Straight connector for linking two ends of the strip

Code	$	Description
DELKLIP18		

DELKLIPL

L-shaped Connector

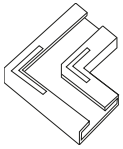

- Straight connector for linking two strip ends at a 90-degree angle.

Code	$	Description
DELKLIPL	20	

DELCAB

Micro 24 Connector

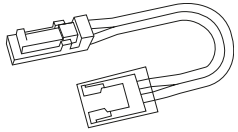

- 24V micro connector for LED strip;
- Length : 11-3/4".

Code	$	Description
DELCAB	41	

DELKLIPJ

Micro 24 Connector

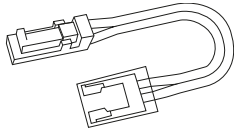

- 24V micro connector for LED strip;
- Length : 79".

Code	$	Description
DELKLIPJ	72	

Keyboard Trays

KB360M

Keyboard Tray

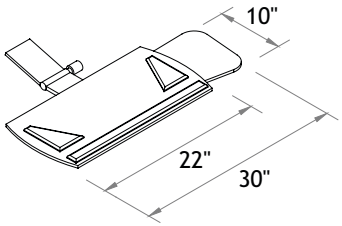

- Black plastic 24-1/2"wide retractable ergonomic keyboard;
- Lift-N-Lock spring system (no lever) to adjust height;
- Handle for easy tilt adjustment from 10" to 15";
- 10" x 7-1/2" mouse tray;
- 19" black gel wrist rest;
- 360º rotation.

Code	$	Description
KB360M	665	

KB

Keyboard Tray

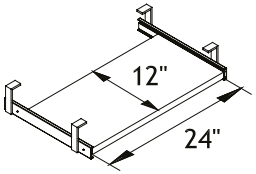

- 24" wide keyboard tray only;
- 5/8" and 1" thick laminate;
- Adjustable height from 1-3/4" to 2-3/4" / additional 2" for slides.

Code	$	Description
KB	210	*1" thick laminate*
KBT	198	*5/8" thick laminate*

KBMOD

Keyboard Tray

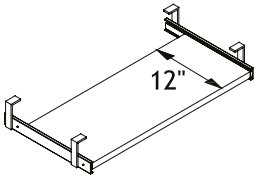

- Keyboard tray, available in lengths from minimum 24" to maximum 30";
- 5/8" and 1" thick laminate;
- Adjustable height from 1-3/4 to 2-3/4" / additional 2" for slides.

Code	$	Description
KBMOD	252	*1" thick laminate*
KBMODT	240	*5/8" thick laminate*

To order, for example a 27" long keyboard tray, 5/8" thick laminate: KBMODT27

KBMODR

Keyboard Tray

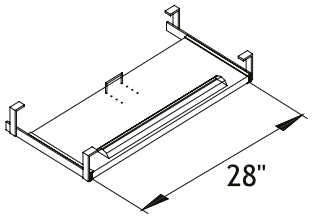

- 28" wide keyboard tray;
- 1" thick laminate;
- Adjustable height from 1-3/4 to 2-3/4" / additional 2" for slides;
- Black gel wrist rest / depth-adjustable stop handles.

Code	$	Description
KBMODR	341	

AP

Wrist Rest

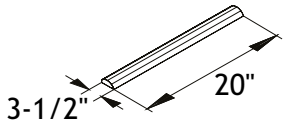

- Black gel wrist rest.

Code	$	Description
AP	80	

CPU Holders

MCPU50

Miniature CPU Holder

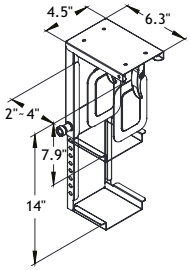

- Height adjustable: 8" - 14";
- Width adjustable: 2" - 4";
- Maximum capacity: 10 kg (22 lbs);
- Need a minimum 5" deep clearance.

Code	$	Description
MCPU50	185	

MCPU90

CPU Holder

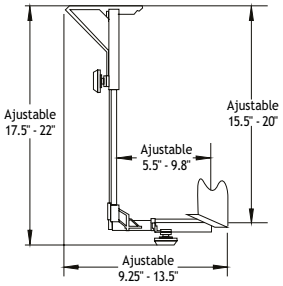

- Black metal CPU holder;
- Easy manipulation;
- Vertical adjustment:
  - Height: 15.5" x 20"
  - Width: 5.5" x 9.8"
- Horizontal adjustment:
  - Height: 17.5" x 22"
  - Width: 9.25" x 13.5"

Code	$	Description
MCPU90	234	*per unit*

CPUIND

CPU Holder

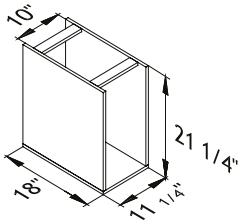

- 5/8" thick laminate CPU holder;
- 10" x 20" interior

Code	$	Description
CPUIND	199	*per unit*

Miscellaneous Accessories

SB

Suspension Bars

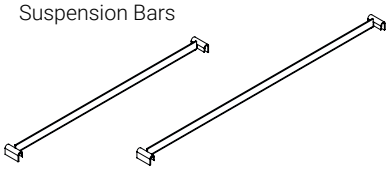

- Short suspension bars: 1 or 2 suspension bars for a left/ right filing for a regular file drawer;
- Long suspension bars: 1 or 2 suspension bars for a front/ back filing for a lateral file drawer.

Code	$	Description
SBV1	7	*1 short suspension bar*
SBV2	14	*2 short suspension bars*
SBH1	7	*1 long suspension bar*
SBH2	14	*2 long suspension bars*

TCPM

Sliding Drawer

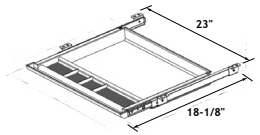

- Black plastic sliding drawer with steel ball bearing slides.

Code	$	Description
TCPM	210	

SWV

Swivel Organizer Tray

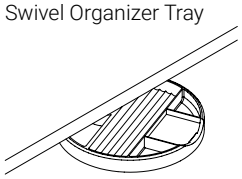

- Storage drawer that rotate 360 degrees;
- Mounts flush to the edge;
- Dimensions: 8-1/4"D x 13-5/8"W x 1-3/8"H.

Code	$	Description
SWV	68	

LK

Lock

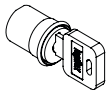

- Finish: Satin nickel and black;
- To order a lock separately, specify if it's a drawer lock (LKSNF or LKBLF) or a door lock (LKSNP or LKBLP);
- To order a factory installed lock, add (LKSN) or (LKBL) after the product code on wich lock will be installed.

Code	$	Description
LKSN	47	*Satin Nickel lock (factory installed)*
LKBL	47	*Black lock (factory installed)*
LKSNF	31	*Satin Nickel front lock*
LKBLF	31	*Black front lock*
LKSNP	31	*Satin Nickel door lock*
LKBLP	31	*Black door lock*
KEY	26	*Set of 2 keys - #501 - 600*
SERR 010	26	*1 master key*

ELPF

Black Plastic Grommet

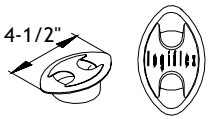

- Standard black plastic grommet with the Logiflex logo engraved;
- 2-1/2" diameter cutout.

Code	$	Description
ELPF	6	*Unit price*

C_PF

Grommet

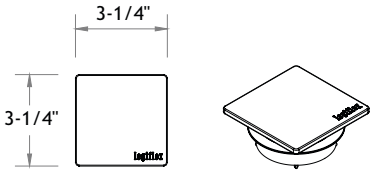

- Square metal grommet with the Logiflex logo engraved;
- Finish: Satin NIckel, Black and Chrome;
- 2-1/2" diameter cutout.

Code	$	Description
CAPF	28	*Unit price - Satin Nickel*
CBPF	28	*Unit price - Black*
CCPF	28	*Unit price - Chrome*
CDPF	28	*Unit price - White*

Electrical Accessories

BE-KDHB-1

Single sided power block (1)

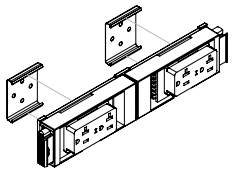

Set including:

- Single sided power block (1);
- 2 Duplex -1 circuit;
- 2 mounting plates;
- Max. 10 duplex per circuit (5 double half power block BE-KDHB-1).

Code	$	Description
BE-KDHB-1-BL	219	
BE-KDHB-1-WH	231	

BE-KDHB-4

Single sided power block (2)

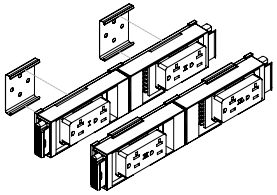

Set including:

- Single sided power block (2);
- 4 Duplex -1 of each circuit;
- 4 Mounting plates;
- Max. 40 duplex (20 double half power block).

Code	$	Description
BE-KDHB-4-BL	450	
BE-KDHB-4-WH	460	

BE-KDBSM-1

Double sided power block

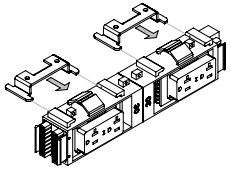

Set including:

- Double sided power block;
- 4 duplex -1 circuit;
- 2 slide mounting brackets;
- Max. 10 duplex per circuit (2 double power block).

Code	$	Description
BE-KDBSM-1-BL	422	
BE-KDBSM-1-WH	441	

BE-KDBSM-4

Double sided power block

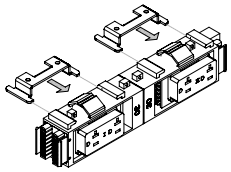

Set including:

- Double sided power block;
- 4 duplex -1 of each circuit;
- 2 slide mounting brackets;
- Max. 40 duplex (10 double power block).

Code	$	Description
BE-KDBSM-4-BL	422	
BE-KDBSM-4-WH	441	

SMWM

Cable Support

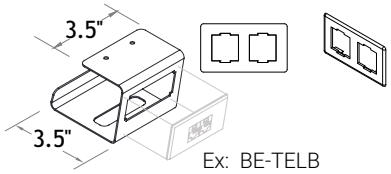

Ex: BE-TELB

- 3.5" metal wire support with 1 telecom plate cutout;
- Satin nickel finish.

Code	$	Description
SMWM	31	

BE-TELA

Telecom plate

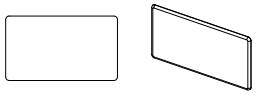

- Blank plate;
- 3-1/8" x 1-3/4";
- Colors: Black, White and Satin nickel;
- To be used with the APB, APF or AP2 cover plate option of the supply walls.

Code	$	Description
BE-TELA-BL	6	
BE-TELA-WH	6	
BE-TELA-SN	6	

BE-TELB

Telecom plate

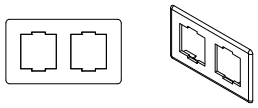

- 2 spaces to install connection ports;
- 3-1/8" x 1-3/4";
- Adapter included.
- Colors: Black, White and Satin nickel.

Code	$	Description
BE-TELB-BL	6	
BE-TELB-WH	6	
BE-TELB-SN	6	

BE-HW

Hardwired conduit power entry

* To be connected to an electrical box by an electrician.

- 8 wires - 4 circuits 20A;
- For 8 trac system;
- Bare wires at one end
- Male end.

Code	$	Description
BE-HW-72	197	*8 wire, 4 circuit - 72"L*
BE-HW-84	214	*8 wire, 4 circuit - 84"L*
BE-HW-96	239	*8 wire, 4 circuit - 96"L*
BE-HW-120	279	*8 wire, 4 circuit - 120"L*
BE-HW-180	409	*8 wire, 4 circuit - 180"L*

Electrical Accessories

BE-PI72

Corded Power entry

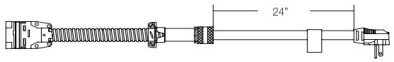

- Corded power entry of 72";
- Right angle 20 Amp plug;
- Male end;
- 1 circuit 20A;
- Must be plug on 20A outlet

Code	$	Description
BE-PI72	244	

BE-NYHW

NYC flex hardwired power infeed

* To be connected to an electrical box by an electrician.

- 8 wires - 4 circuits 20 A;
- Bare wires at one end;
- For 8 trac system;
- Male end.

Code	$	Description
BE-NYHW-72	444	
BE-NYHW-84	467	
BE-NYHW-96	483	
BE-NYHW-108	507	
BE-NYHW-120	526	

BE-J

M/M jumper

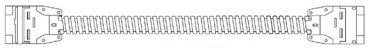

- Non-ajustable;
- 8 wire - 4 circuits;
- M/M;
- For 8 trac system;
- Minimum 12" - Maximum 216".

Code	$	Description
BE-J12	126	*8 wire cable / 4 circuit - 12"L*
BE-J18	134	*8 wire cable / 4 circuit - 18"L*
BE-J24	142	*8 wire cable / 4 circuit - 24"L*
BE-J36	155	*8 wire cable / 4 circuit - 36"L*
BE-J42	165	*8 wire cable / 4 circuit - 42"L*
BE-J48	175	*8 wire cable / 4 circuit - 48"L*
BE-J54	182	*8 wire cable / 4 circuit - 54"L*
BE-J60	198	*8 wire cable / 4 circuit - 60"L*
BE-J66	206	*8 wire cable / 4 circuit - 66"L*
BE-J72	216	*8 wire cable / 4 circuit - 72"L*
BE-J78	229	*8 wire cable / 4 circuit - 78"L*
BE-J84	240	*8 wire cable / 4 circuit - 84"L*
BE-J96	259	*8 wire cable / 4 circuit - 96"L*
BE-J120	302	*8 wire cable / 4 circuit - 120"L*
BE-J216	561	*8 wire cable / 4 circuit - 216"L*

BE-HC

Harness connector F/F

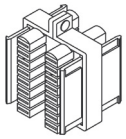

- Used to connect jumper cables and blocks together;
- 1-1/2" x 2-1/4".

Code	$	Description
BE-HC	59	

BE-DHB

Single sided power block

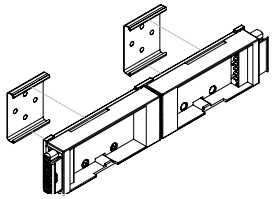

- Maximum of 2 duplex per block;
- Includes mounting plates ;
- F/F ;
- For 8-trac system ;
- Duplex ordered separately.

Code	$	Description
BE-DHB	114	

BE-DBSM

Double sided power block

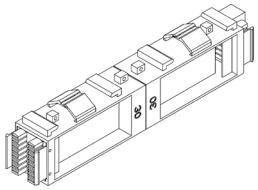

- Maximum of 4 duplex per block;
- For 8-trac system ;
- Slide mounting sold separately ;
- F/F ;
- Duplex ordered separately.

Code	$	Description
BE-DBSM	165	

Electrical Accessories

BE-D20-C

Duplex

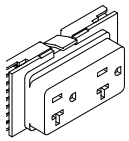

- 20 Amp;
- Height 1-1/18";
- For BE-DHB & BE-DBSM blocks ;
- Colors: Black or white ;
- Maximum of 10 Duplex per circuit.

Code	$	Description
BE-D20-C-1-BL	52	*Circuit 1 - 20A - Black*
BE-D20-C-2-BL	52	*Circuit 2 - 20A - Black*
BE-D20-C-3-BL	52	*Circuit 3 - 20A - Black*
BE-D20-C-4-BL	52	*Isolated Circuit 4 - 20A - Black*
BE-D20-C-1-WH	59	*Circuit 1 - 20A - White*
BE-D20-C-2-WH	59	*Circuit 2 - 20A - White*
BE-D20-C-3-WH	59	*Circuit 3 - 20A - White*
BE-D20-C-4-WH	59	*Isolated Circuit 4 - 20A - White*

CHI

BE-SM58-2

Slide mount bracket

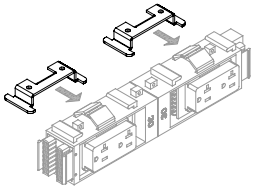

2 brackets;

- Only for the double power block (BE DBSM);
- 5/8" height;
- Screws included.

Code	$	Description
BE-SM58-2	45	

CHI

BE-WMS-32

Power and data cable support single sided (1)

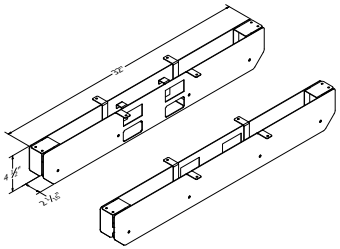

- 32" metal wire management system for power block BE-DHB and 2 telecom plate cutouts
- Channel to isolate power cables from data cables.
- Screws included to install the channel under a top.
- Power block, duplexes and telecom plates not included
- Colors : Black or white.

Code	$	Description
BE-WMS-32-BL	281	*Black*
BE-WMS-32-WH	281	*White*

BE-WMD-32

Power and data cable support double sided (1)

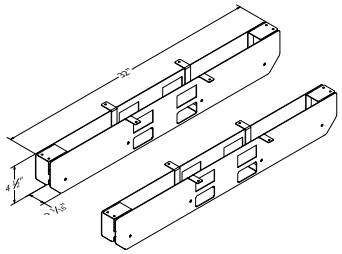

- 32" metal wire management system for power block BE-DBSM and 4 telecom plate cutouts.
- Channel to isolate power cables from data cables.
- Screws included to install the channel under a top.
- Power block, duplexes and telecom plates not included
- Colors : Black or white.

Code	$	Description
BE-WMD-32-BL	281	*Black*
BE-WMD-32-WH	281	*White*

WM

Velcro Tie

- Velcro tie for electrical cable;
- The non-metallic buckle is safe to use around electrical devices;
- Dimensions: ¾" x 10";
- Color: black.

Code	$	Description
WM	14	*Unit price*
WMS	15	*with #8, 9/16" Robertson screw, per unit*

BR1

Branch unit

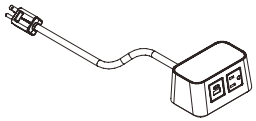

CHI

- 1 power outlet / 1 dual charger USB-a+c;
- Table top with braided storm 120 IN power cord.

Code	$	Description
BR1BL	564	*Black*
BR1WH	564	*White*

BR2

Branch unit

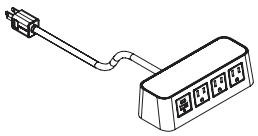

- 3 power outlet / 1 dual charger USB-a+c;
- Table top with braided storm 120 IN power cord.

Code	$	Description
BR2BL	726	*Black*
BR2WH	726	*White*

Electrical Accessories

BE1-DMB

Duplex Receptacle with Mounting Bracket

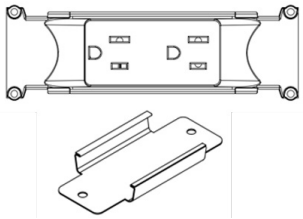

- Duplex receptacle 15 Amps;
- Metal mounting kit included;
- M/M;
- For system 1 circuit 15 Amps;
- Maximum of 8 duplex per circuit.

Code	$	Description
BE1-DMB	80	

BE1-DC

Connector F/F between Duplex

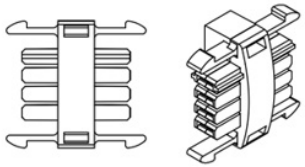

- Used to connect duplex to duplex;
- F/F;
- For system 1 circuit 15 Amps.

Code	$	Description
BE1-DC	18	

BE1-PI

Corded Power Infeed 15 Amps

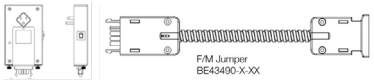

- Corded power infeed with 15 Amps plug (in 2 section);
- Female end;
- For system 1 circuit 15 Amps;
- Minimum 72" - Maximum 120".

Code	$	Description
BE1-PI72	607	
BE1-PI120	665	

BE1-J

Jumper F-F

- F/F jumper cable;
- Not adjustable;
- For system 1 circuit 15 Amps;
- Minimum 60" - Maximum 120".

Code	$	Description
BE1-J18	85	Cable - 18"L
BE1-J36	104	Cable - 36"L
BE1-J48	122	Cable - 48"L
BE1-J60	131	Cable - 60"L
BE1-J72	148	Cable - 72"L
BE1-J120	197	Cable - 120"L

BE1-HC

H-Connector M/M

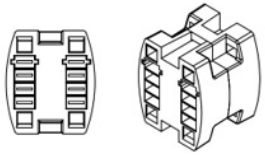

- H-connector M/M;
- Used to connect jumper cables F/F;
- For system 1 circuit 15 Amps.

Code	$	Description
BE1-HC	29	

Electrical Accessories

POR 01

RJ45, CAT 6 connectivity port

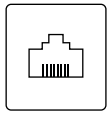

- RJ45, CAT6 connector;
- RJ45 M/F cable - 72" ;
- Finish: Black.

Code	$	Description
POR 01	156	

POR 02

CHI

RJ11 connectivity port

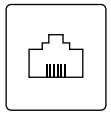

- RJ11 connector, 4 pin
- RJ11 M/F cable - 84";
- Finish: Black.

Code	$	Description
POR 02	45	

POR 03

USB connectivity port

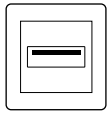

- 1 USB (data/passive);
- USB M/F cable - 72";
- Finish: Black.

Code	$	Description
POR 03	96	

CHI

POR 04

HDMI connectivity port

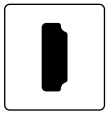

- HDMI connector;
- HDMI F/F cable - 18";
- Finish: Black.

Code	$	Description
POR 04	142	

POR 05

Mini Stereo Jack

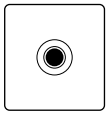

- 3.5 mm Mini Stereo Jack, M/F;
- Audio M/F cable -120";
- Finish: Black.

Code	$	Description
POR 05	50	

POR 06

VGA Connector

- VGA connector, 15 pin;
- VGA M/F cable -120";
- Finish: Black.

Code	$	Description
POR 06	180	

Electrical Accessories

PBL

Power bar

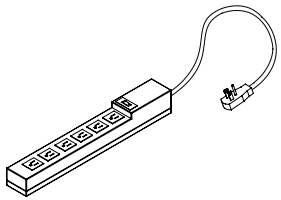

- Power bar with 6 electric outlets;
- 120" power cable with electric plug.

Code	$	Description
PBL	70	

CT

Metal cable tray

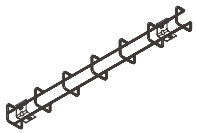

Metal cable tray

- In stainless steel;
- Dimensions: 2x4; Interior dimensions: 1-7/8"D x 1-7/8"H
- Length of 24" and 118" (118" can be cut on site).
- With mounting hardware

Code	$	Description
CT24	121	
CT118	255	

SPINE

Wire Management Spine

- 2" diameter;
- Gray plastic.

Code	$	Description
SPINE	182	

CTCOVER

Laminate cover

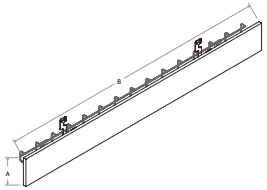

- Laminate cover for cable tray;
- Mounting brackets;
- Dimension "B" is 1/4" recessed.

Code	$	Description
58		*6 x 30*
63		*6 x 36*
69		*6 x 42*
74		*6 x 48*
82		*6 x 54*
88		*6 x 60*
94		*6 x 66*
100		*6 x 72*
107		*6 x 78*
112		*6 x 84*

DSG

Double-sided grommet

Double-sided grommet

- Hole diameter: 2.5"
- Use for electrical cable management with division panels. Drilling to be done by the installer.
- Grommet to cut on site for desired thickness to cover;
- Can not be cut with a simple utility knife, use a sharper and safer tool.

Code	$	Description
DSG BL	31	*Black*
DSG WH	31	*White*

WMP

Wire Management Pole

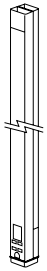

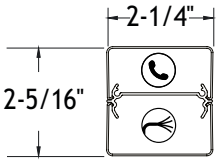

- Blank steel pole to bring cables from the ceiling to a work station;
- Satin nickel finish with a grey boot base;
- 2 compartments: 1 power/1 communications
- Mounting hardware, entrance end plate and ceiling trim plate included;
- Wires and outlets not included;
- Height: 12' 5".

Code	$	Description
WMP	492	

Electrical Accessories

T5

Florescent task light

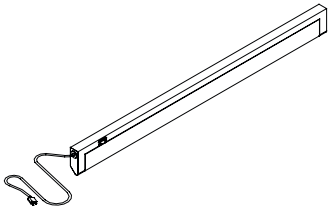

- Florescent lamp (T5) with swivel reflector and electronic ballast;
- 120" power cable with electric plug;
- 16" connection wire for T524, T536 or T548 florescent task lamps;
- Finish: Black and Satin Nickel

Code	$	Description
T524 BL	192	*24" length - Black*
T524SN	192	*24" length - Satin Nickel*
T536 BL	258	*36" length - Black*
T536 SN	258	*36" length - Satin Nickel*
T548 BL	340	*48" length - Black*
T548 SN	340	*48" length - Satin Nickel*

DEL20

LED task light

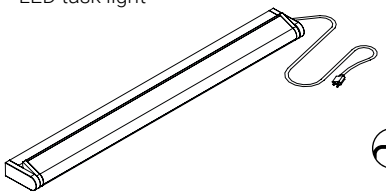

- 20" LED task light, 7.5W, cool white;
- 180° swivel feature;
- 72" power cable with electric plug;
- 20" connection wire for DEL20 task lamps;
- Finish: Satin nickel.

Code	$	Description
DEL20	236	*20" length*

As our product line is constantly evolving and expanding, we recommend that you visit logiflex.ca for updates.

logiflex
1235 St-Roch N., Sherbrooke QC J1N 0H2 Canada
T : 1.877.864.9323 | F : 1.800.474.7830 | logiflex.ca

CERTIFIED INDOOR AIR QUALITY™ SCS GLOBAL SERVICES
INDOOR ADVANTAGE GOLD FURNITURE